sirona
The Dental Company

CEREC 3

Service Manual

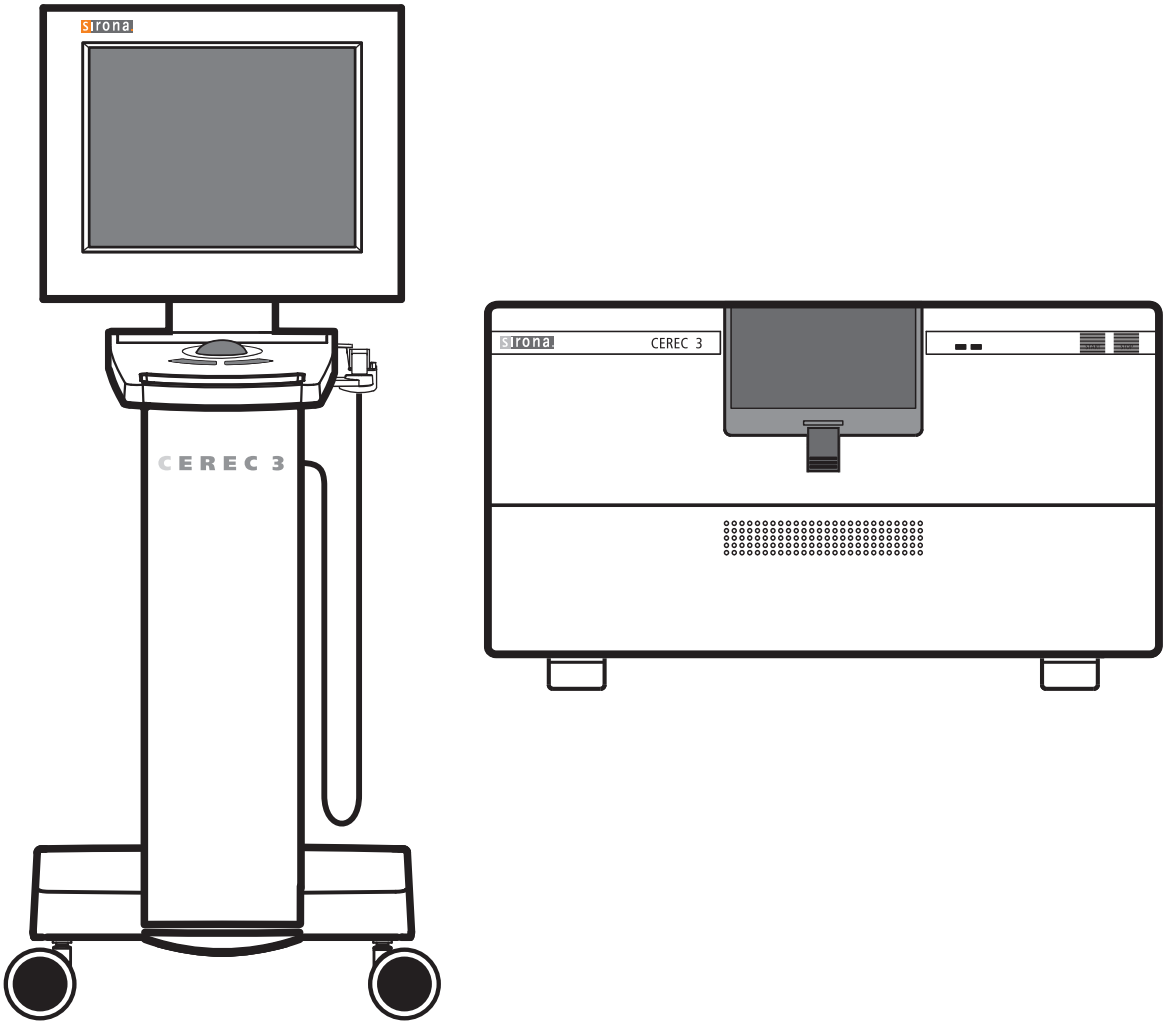

Additional requirements:

- **Spare parts list**

  Order No. 58 62 581

- **Circuit diagrams** CEREC 3 / CEREC Scan

  Acquisition unit: Order No. 58 35 710

  Milling unit: Order No. 58 35 728

- **Tools**
  - Hexagonal screwdriver (90° offset): Sizes 1.5; 2; 2.5; 4; 6
  - Fork wrench, sizes 5.5; 8; 10; 14
  - Torque screw driver, sizes 5, 6, 20, 25, 40
  - Philips-head screw driver Size 1
  - Slot screw driver, insulated, Size 2, 3
  - Socket wrench 8 mm
  - Cutting pliers
  - Special tool for monitor nut
  - Special tool for locking button: Order No.: 59 08 947

- **Accessories**
  - Digital multimeter, accuracy class: 1
  - Soldering tool for repairing cables
  - Side cutting pliers
  - Cable ties
  - Teflon tape
  - PS2 mouse (recommended)
  - PS2 keyboard (recommended)
  - 3.5” disk
  - Calibration piece and pins (recommended)
  - Fuses (recommended):

F1/F2 (2 pcs.)	5 AT,	Order No.: 20 33 111
F1/F2 (2 pcs) for acquisition unit starting with Ser. No.: 3300		
	6,3 AT,	Order No.: 10 77 452
F3	1.25 AL	Order No.: 59 15 181
F4	2 AT	Order No.: 10 80 522

General 1

Service Software 2

Trouble Shooting: Milling Unit 3

Trouble shooting: Acquisition Unit 4

Settings 5

Acquisition Unit: Repairs 6

Milling Unit: Repairs 7

Installing Software 8

1 General 1-1
1.1 General Notes 1-3

2 Service Software 2-1
2.1 General Notes 2-3
2.2 Basic Structure of Test Dialogs 2-5
2.3 Individual Test Points 2-10

3 Trouble Shooting: Milling Unit 3-1
3.1 Device cannot be switched ON. Green LED (Ready for operation) not illuminated ... 3-5
3.2 No connection to PC / acquisition unit. Software cannot be installed 3-7
3.3 No air pressure 3-9
3.4 Fan not running. Unit shuts down completely after a short time 3-11
3.5 Water pump: Pressure too low 3-13
3.6 Defective light barrier 3-15
3.7 Door switch. Please close milling chamber door 3-17
3.8 Motor locking positions: Problems changing grinders 3-19
3.9 Stepping motors (milling unit). Loss of steps 3-21
3.10 Touch errors 3-23
3.11 Trouble shooting. Defective CCP board 3-25

4 Trouble shooting: Acquisition Unit 4-1
4.1 System cannot be switched ON 4-7
4.2 PC not booting properly I 4-9
4.3 PC not booting properly II 4-11
4.4 PC does not respond during switch-on, PC power supply does not start 4-12
4.5 Further PC faults 4-14
4.6 Monitor image flickering 4-15
4.7 No monitor display 4-17
4.8 Incorrect monitor display format size 4-19
4.9 Monitor: Color shade/gray scale is too weak 4-21
4.10 Trackball not functioning 4-23
4.11 Trackball buttons not functioning 4-25
4.12 Pedal not functioning 4-27
4.13 Keyboard not functioning /defective 4-29
4.14 No camera image 4-31
4.15 Incorrect measuring sensor setting 4-33
4.16 Camera calibration: messages 4-35
4.17 Interference at radio interface 4-37
4.18 No sound or sound level too low 4-41
4.19 No Sirocam camera image 4-43
4.20 Sirocam camera image interference 4-45

4.21 SIROCAM camera: Incorrect image settings 4-47
4.22 Digital X-ray problems 4-49

5 Settings 5-1
5.1 Monitor Settings 5-3
5.2 Calibrating the 3D camera 5-4
5.3 Pairing the DECT-radio interface (EU) 5-5
5.4 Replacing a module of the DECT radio interface (EU) 5-8
5.5 Pairing the Futaba radio interface (USA/Japan) 5-9

6 Acquisition Unit: Repairs 6-1
6.1 Electrical and Electromechanical Components 6-4
6.2 Mechanical components 6-30

7 Milling Unit: Repairs 7-1
7.1 Milling Unit: General Activities 7-3
7.2 Replacing the Scanner 7-5
7.3 Replacing the Drive and/or Motor 7-11
7.4 Checking / Adjusting Stop positions 7-13
7.5 Stepping Motors: Replacing / Adjustment 7-15

8 Installing Software 8-1
8.1 Acquisition Unit: Network Installation 8-3
8.2 How to install an MO drive 8-25

9 Re-test 9-1
9.1 When is the re-test carried out? 9-1
9.2 Description of device type 9-1
9.3 To be carried out on completion of the test 9-1
9.4 What the test steps involve 9-1

sirona

The Dental Company

1 General

CEREC 3

General

List of Contents

1.1 General Notes 1-3

1.1 General Notes

Nominal line voltage ranges

The CEREC® 3 acquisition unit can be used in the following **nominal line voltage ranges**:

- Europe 230 VAC / 50 Hz
- USA 115 VAC / 60 Hz
- Japan 100 VAC / 50 Hz and 60 Hz

The CEREC 3 / CEREC Scan milling unit can be used in the following **nominal line voltage ranges**:

- 100 V – 230 VAC; 50/60 Hz

Faults in electronic medical equipment caused by mobile phones

In order to ensure safe operation of electronic medical equipment, the use of mobile phones in practices and hospital areas is strictly prohibited.

Opening the device

When opening the device:

Please observe the necessary precautions when handling printed circuit boards (ESD).
Touch a ground point to discharge static electricity before handling any components.

Measurements

Always switch OFF the device before connecting the measuring instrument.

Select the correct current/voltage type and adjust the measuring range to match the expected readings.

Perform continuity tests only on devices which are switched off.

When replacing parts

Switch OFF the device before replacing any parts.

For safety reasons the device should be disconnected from the power supply when replacing parts around the line transformer.

The item numbers for ordering spare parts can be found in the spare parts list, Order No. 58 62 581.

The diagrams contained in the spare parts list provide a useful guide when replacing parts.

Repairing and/or upgrading the PC drawer

Replace the broken warranty seal on the bottom side of the PC drawer with the supplied seal of conformity.

Disposal

Please observe the instructions found in the relevant user guide.

sirona

The Dental Company

2 Service Software

CEREC 3

Service Software

List of Contents

2.1 General Notes 2-3
2.2 Basic Structure of Test Dialogs 2-5
2.3 Individual Test Points 2-10

2.1 General Notes

Test requirements

Requirement for all tests:

- PC / acquisition unit are switched on and ready for operation.
- PC / acquisition unit and milling unit are interconnected (per interface cable or radio link)
- The software has been loaded for the milling unit (see Operating Instructions for Milling Unit/Milling Unit Scan, Switching the units on, **Initial start-up**).
- The door of the milling chamber must remain closed as long as any motors or the water pump are running.
  If the door of the milling chamber is opened during the test, all motors and the water pump will switch off immediately (same function as pressing the Stop button).
- The tools (burs) must be installed already during operation of the water pump.
- During operation of the water pump, the air pump must always be running to protect the gearing against water damage, i.e. the air pump is started first. If the air pressure switch detects no air pressure, an error message will appear and the test can not be performed.

Service Software Log File

The service software is a component of the product software. This software generates a log file for all tests performed.
This log file is located on delivery in the directory

c:\programme\Cerec\System\Service\Protocols and is named

Test file_XXXXXXXXXXXX.TXT

The Xs here denote the serial no. of the controller board.

Each time the service software is started, a confirmation query appears asking whether this file (if it already exists) should be deleted. If **NO** (do not delete) is selected, the tests subsequently performed will be appended to the ones previously saved. Each test is labeled with a starting and ending date. The test file can be viewed with the editor at any time. If the user exits from a test without saving it, he will be asked if he really wants to quit without saving. If Yes (Quit without saving) is then selected, the data just measured will be lost.

After completing a test section, the log file must be saved under a new name to a diskette belonging to the corresponding unit.

Assessment scores

There are three different scores which can be assigned to test results:

- Passed fully (green label)
- Passed (yellow label)
- Not passed (red label)

NOTE

These assessment categories apply starting with ***software version V1.1 R600***

The score **Passed** (yellow label) may be irrelevant for a specific test. In this case **n.a.** (not applicable) will be written to the log file for this score.

CAUTION

To ensure trouble-free operation of the system, all test results should be labeled **"Passed fully"**.
If the test results are marked **"Passed"**, *uncritical changes have occurred at this point of time.*
If the test results are labeled **"Not passed"**, *you must find and correct the fault(s)*

Example of test protocol:

Path: ***c:\programme\Cerec\System\Service\Protocols***

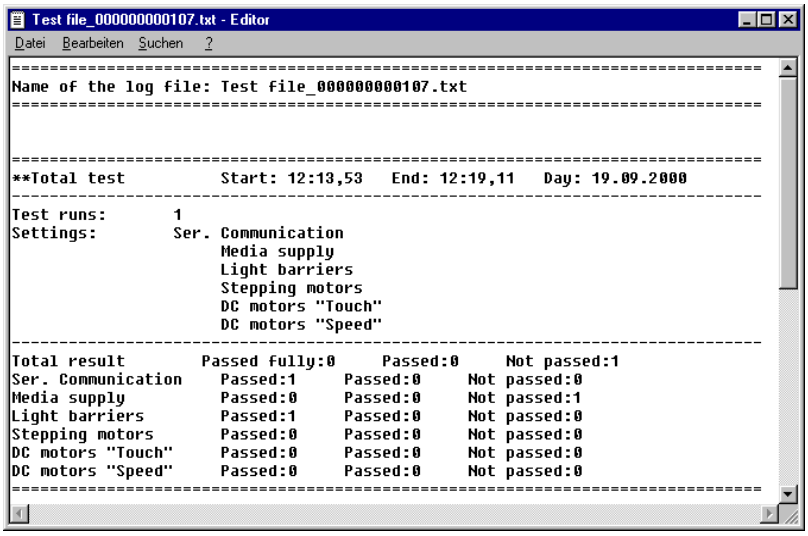

```
Test file_000000000107.txt - Editor
Datei  Bearbeiten  Suchen  ?
==============================================================================
Name of the log file: Test file_000000000107.txt
==============================================================================


==============================================================================
**Total test          Start: 12:13,53   End: 12:19,11   Day: 19.09.2000
------------------------------------------------------------------------------
Test runs:       1
Settings:        Ser. Communication
                      Media supply
                      Light barriers
                      Stepping motors
                      DC motors "Touch"
                      DC motors "Speed"
------------------------------------------------------------------------------
Total result        Passed fully:0     Passed:0     Not passed:1
Ser. Communication    Passed:1     Passed:0     Not passed:0
Media supply          Passed:0     Passed:0     Not passed:1
Light barriers        Passed:1     Passed:0     Not passed:0
Stepping motors       Passed:0     Passed:0     Not passed:0
DC motors "Touch"     Passed:0     Passed:0     Not passed:0
DC motors "Speed"     Passed:0     Passed:0     Not passed:0
==============================================================================
```

NOTE

If the milling unit housing is left open, the temperature switch on the **CC** *PC board may cut out after a short time (T>90°C). The cooling fan can work properly only with the cover closed.*

Overview of gearing unit:

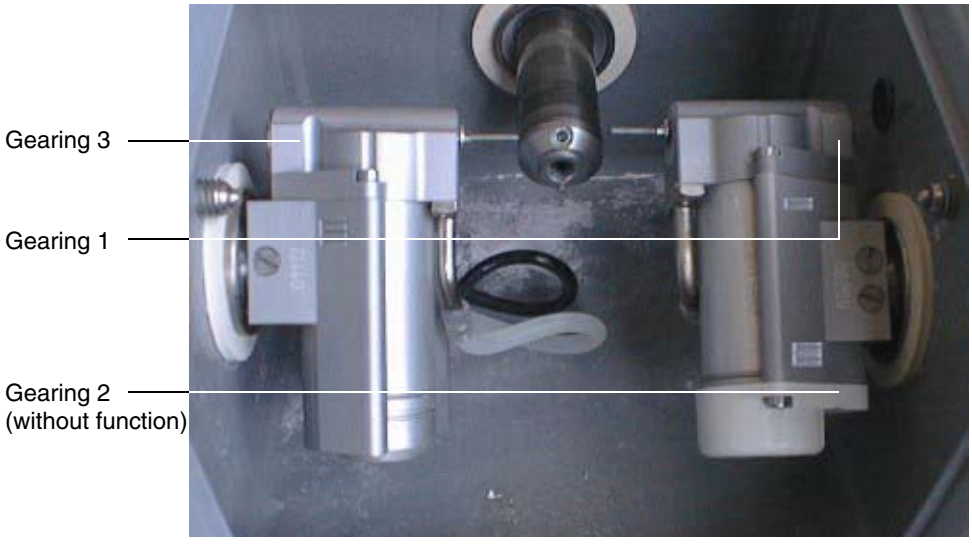

2.2 Basic Structure of Test Dialogs

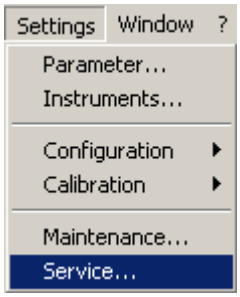

NOTE

For a functional description of the menu items, see the user's manual.

Via the ***Service*** menu you can ...

- select a wide range of Service functions with ***Settings/Service...***

CAUTION

The Service functions may be used only by authorized service technicians who have been trained by Sirona.

Password protection

The service software test dialogs are protected by a password to prevent manipulations by unauthorized users.

The password has four digits. It changes daily and is generated from the system date of the computer according to the following scheme:

Password number	Generated from
1	2. number of the current month
2	1. number of the current month
3	2. number of the current day
4	1. number of the current day

Example: 24.05.2001 becomes 5042

NOTE

Since the password is thus valid for only one day, it may be passed on to the user in exceptional cases, e.g. when providing him with emergency help over the phone.

CAUTION

The password should always be treated confidentially. Before entering the password, always determine the date as inconspicuously as possible.

NOTE

If you enter the correct password, and the commands are nevertheless not enabled, first check the system date of the computer.

The dialog for setting the system time can be called up in all Windows operating systems by double-clicking the time displayed in the status line.

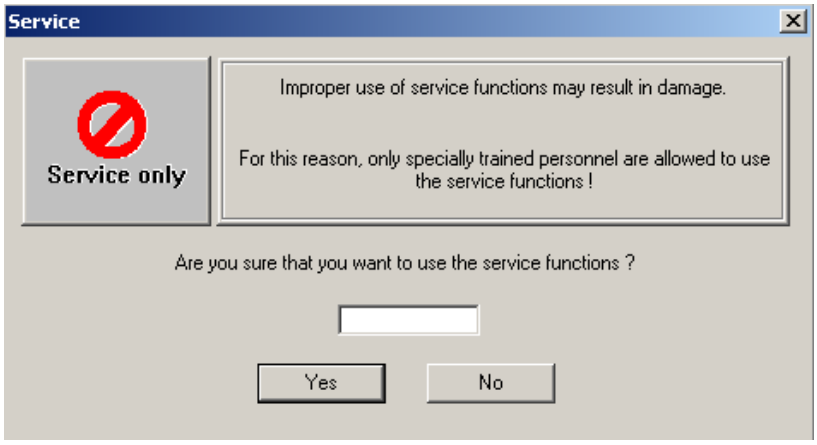

Now enter the password.

If you confirm this ***Service*** dialog with ***Yes***, the ***Test selection*** dialog box will open.

Log file

NOTE

If a log file named after the milling unit already exists at the time of the program start, a confirmation query will appear asking if the data from the new test run should be appended to the existing file or it should be deleted first.

NOTE

If the display "…0000.txt" appears, this means that there is no connection to the milling unit.

Possible causes:

- The CEREC 3 program has been started more than once
- There is no (cable or radio-link) connection between the milling unit and the acquisition unit/PC
- The software download to the milling unit has not been completed.

Test selection dialog

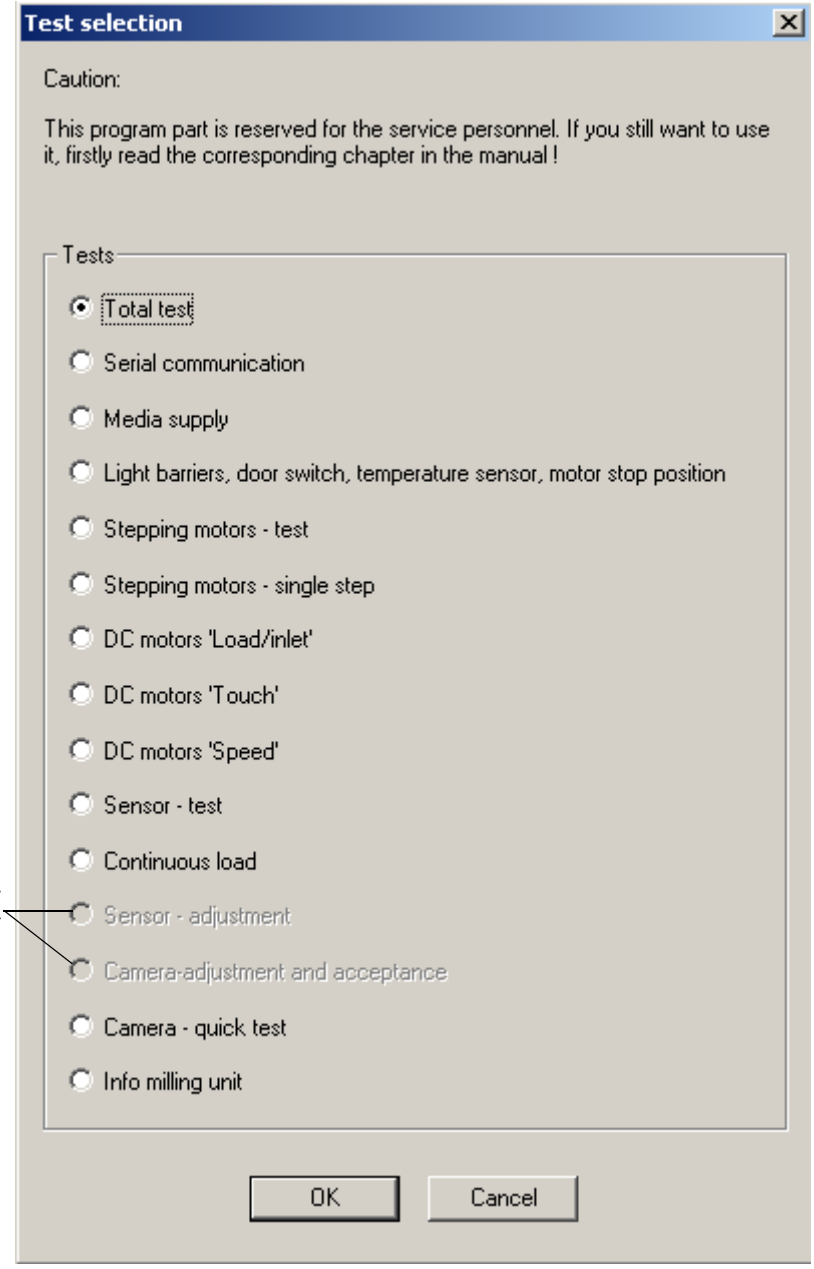

Tests performed only at the factory

In the ***Test selection*** dialog you can select …

- a ***Total test*** (default selection on delivery) or
- an individual test.

The selected test dialog is then opened by clicking on ***OK***.

Example: Total test

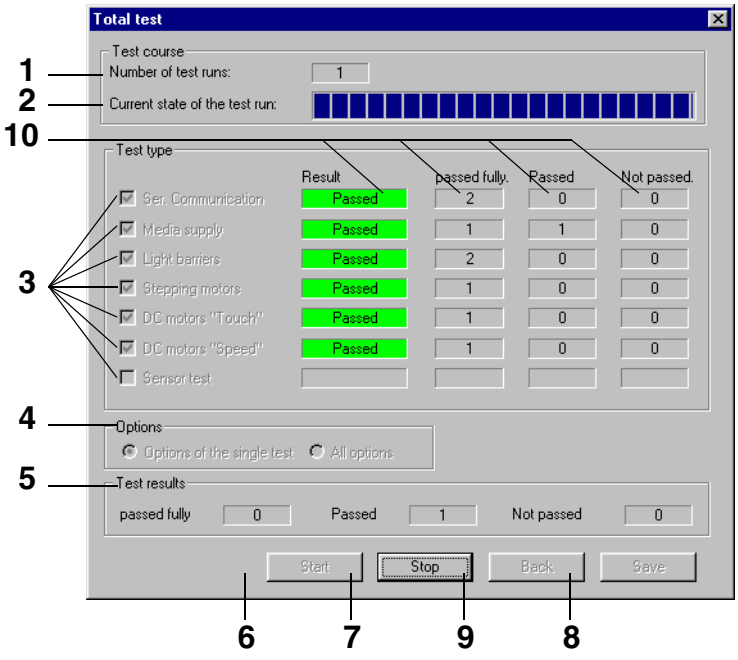

1. Number of test runs completed since the last time the ***Start*** button was actuated.
2. Status bar for current state of test run.
3. Check boxes for selecting (activating/deactivating) the tests available in this test dialog.
4. Check box for selecting the options possible in this test dialog.
5. Number of test results since the last ***Start:***
   - Passed fully
   - Passed
   - Not passed
6. Pressing ***Start*** initiates the test run with the selecting settings.
   The test run will be repeated until it is interrupted with the Stop button.
   The test run counter is then reset to 0.
   Once started, the test run can be halted only with Stop. No other inputs are possible during the test run.
7. The test is canceled as soon as possible with ***Stop***.
   The test in progress at the time of cancellation is not counted. All inputs are now possible again.
8. ***Save*** stores all existing data to the log file. The data are appended to the previously existing log file (if the current test run has not yet been saved). If no data exist, a message to that effect will appear (confirm with ***OK***). Once a test run has been saved to the log file, a new test run must be started before selecting the save function again.

9. Press ***Back*** to quit the test dialog and return to the service dialog.
If any data exist and have not yet been saved, you will be queried whether or not the test data should be saved.

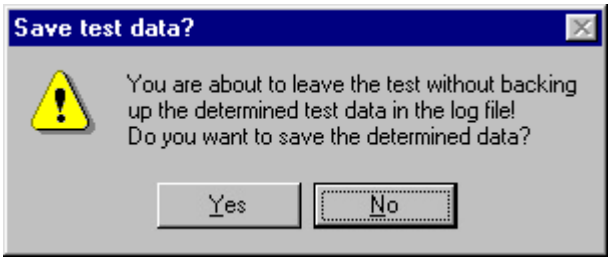

10. Result:

- No color => **No** measurement available yet
- Green => Measurement shows that test was **Passed fully**
- Yellow => Measurement shows that test was **Passed**
- Red => Measurement shows that test was **Not passed**

2.3 Individual Test Points

2.3.1 Serial Communication

The test is primarily used to measure the speed and quality of data transmission. This is especially important if the system is not operated through the standard line (RS-232 max. 10 m), but via other types of connections instead e.g. an infrared link, a DECT coupling or over longer distances via interface converters e.g. RS-422.

The transmission time between the beginning of transmission and the end of reception is calculated for a specific data record on the PC. A test run comprises one complete transmission in both directions.

The values thus measured are then saved to the log file.

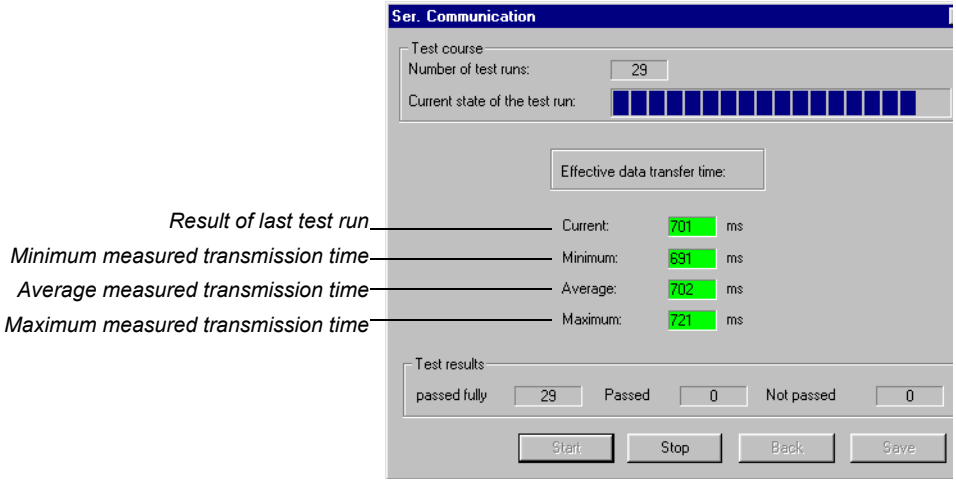

Typical values:

		COM1 Baud rate: 115200	COM1 Baud rate: 19200
Cable		400-500 ms	–
Radio	Europe	600-750 ms	–
	USA/Japan	–	2-3 s

NOTE

The limiting values and color coding refer to a baud rate of 115200.

2.3.2 Media supply

Purpose of Test:

To check the media supply (air, water, fan) for proper functioning and test the pressure switches and the run-up time of the pump.

Procedure

The pumps and the fan are switched on by nominal select control depending on selection. The motor currents and the condition of the pressure switches are registered. The points of time when the pressure detectors respond are measured. After approx. 5 seconds the pumps are switched off and the time required until the pressure switch responds is measured and evaluated.

Save

Save stores the measured values to the log file under the heading of Media supply.

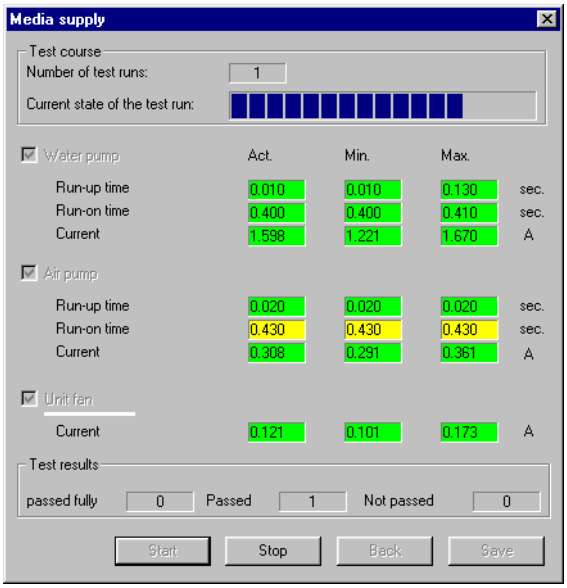

NOTE

The limiting values apply to a completely filled water circuit.

Deviations of measurements

Deviations may occur:

- During the first test run (if any air is still in the water circuit)
- If the amount of water in the water tank is insufficient
- After filling the water tank.

2.3.3 Light Barriers, Door Switch, Temperature Sensor and Motor Stop Positions

Purpose of Test:

This test serves to evaluate the safe functioning of the light barriers and check the door switch, the temperature sensor and the motor stop positions.

Light Barriers

When the end position is located, the slot of the gear is measured via the width and height at which the stepping motor positions are registered with the flanks.

The light barriers to be tested can be selected in all variations. If no light barrier is selected, the Start button is not active.
Default setting: All light barriers selected.

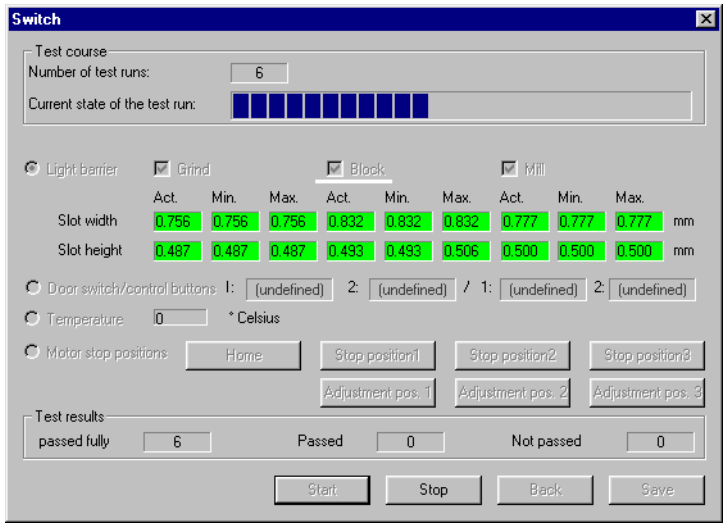

Door Switch/Control Keys

The current state of the door switch and control keys can be checked via a status bar display.

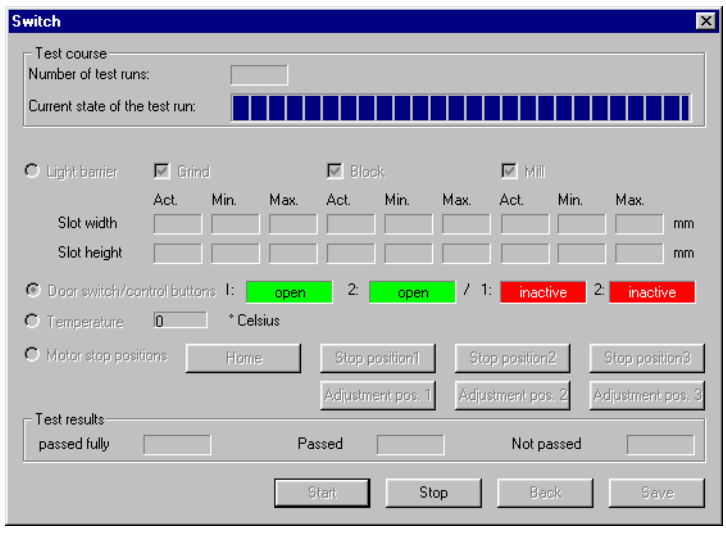

Temperature

A temperature display has been realized to check the temperature of the milling machine.

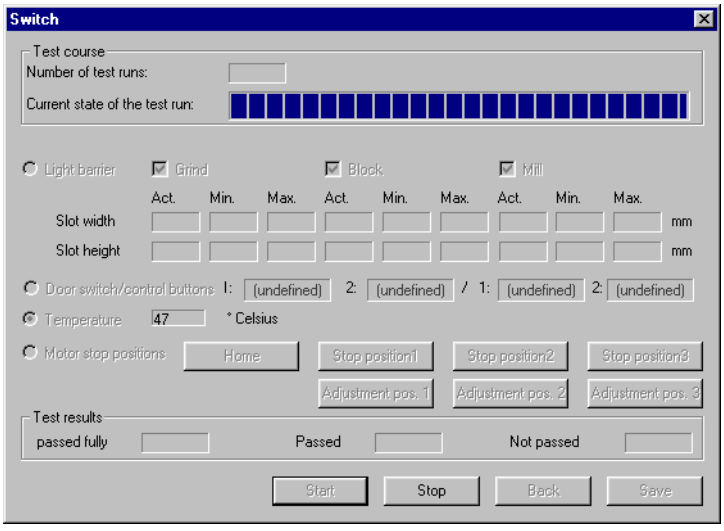

Motor Stop Positions

In the ***Test selection*** dialog, ***Motor stop positions*** is defined as the default setting.

The motors are moved to these positions to test the motor stop positions. Depending on which button is selected, the motors move to the corresponding position and stop there.
The motors can be reset to their home positions by pressing the ***Home*** button.

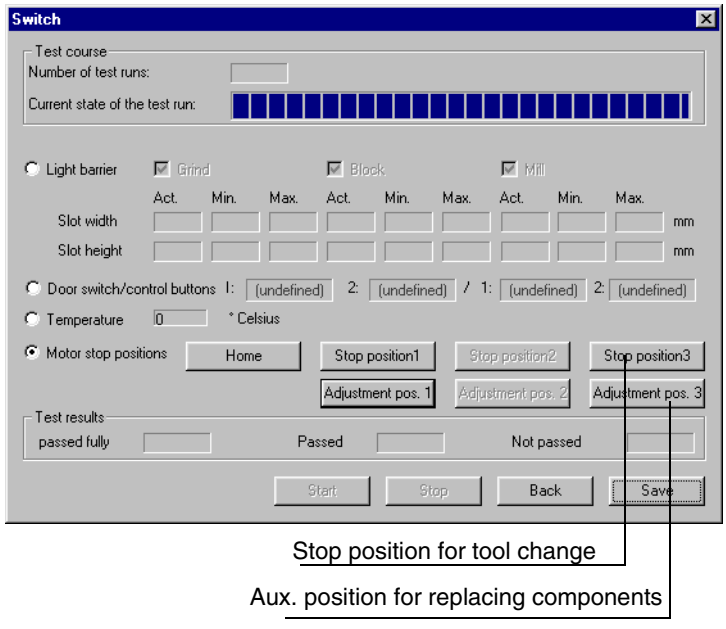

If the home position can not be reached or lost steps occur during motor movement, this will be reported.

2.3.4 Stepping Motor Test

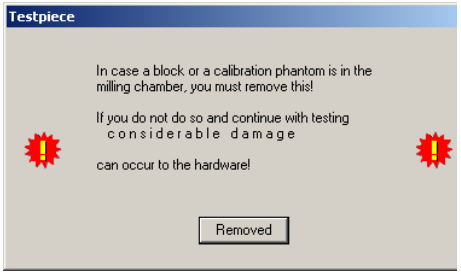

! ***CAUTION***

*Observe the warnings in the **Testpiece** dialog.*

Purpose of Test:

This test serves to evaluate the functioning of the stepping motors. The stepping motors are tested and evaluated for this purpose. The evaluation is made based on a factor for the reserve capacity of each stepping motor. In addition, this test can also be used for installation and adjustment purposes as well as to break in the milling machine.

Procedure

It is possible to individually trigger and test the stepping motors in various combinations.
The stepping motors are run at various speed settings via an acceleration table and the resulting step losses are measured. The number of step loss events is then registered and evaluated. Finally, a reserve capacity is assigned to each motor based on this data.

Display of Test Results

In order to satisfy different requirements for adjustment and testing purposes, this test also offers the option of choosing between data summation and display of the results for individual test runs.

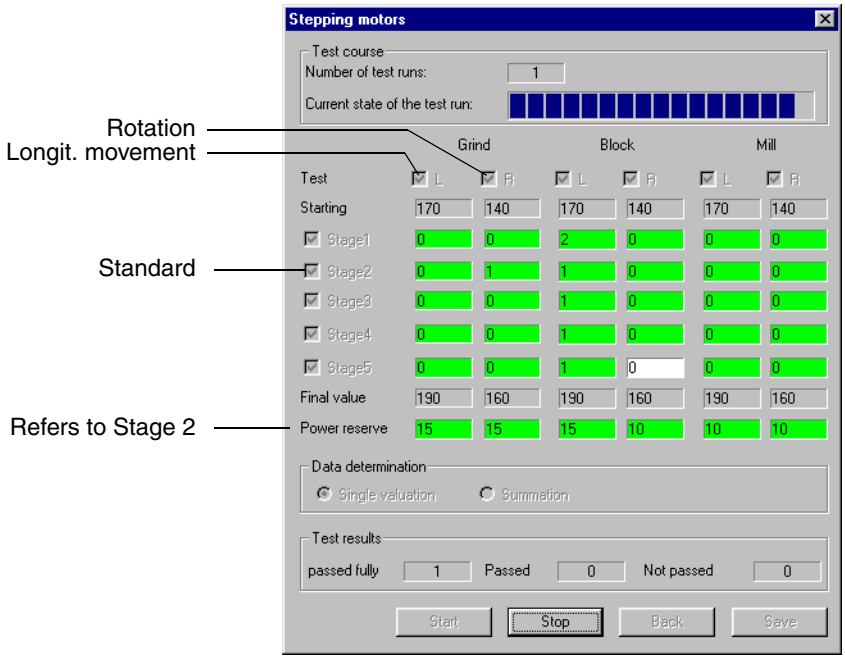

2.3.5 Stepping Motors - Single Step

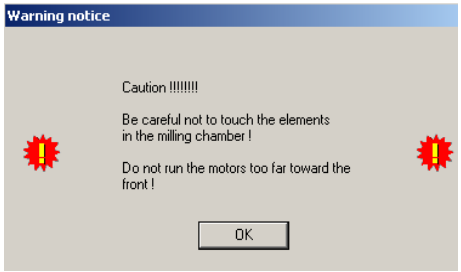

! ***CAUTION***

Observe the warnings in the opened dialog.

Purpose of Test:

The test is used to control the motors individually in case of malfunction.

Procedure

Using the ***Move*** buttons, you can move the individual motors in the longitudinal and rotation directions.

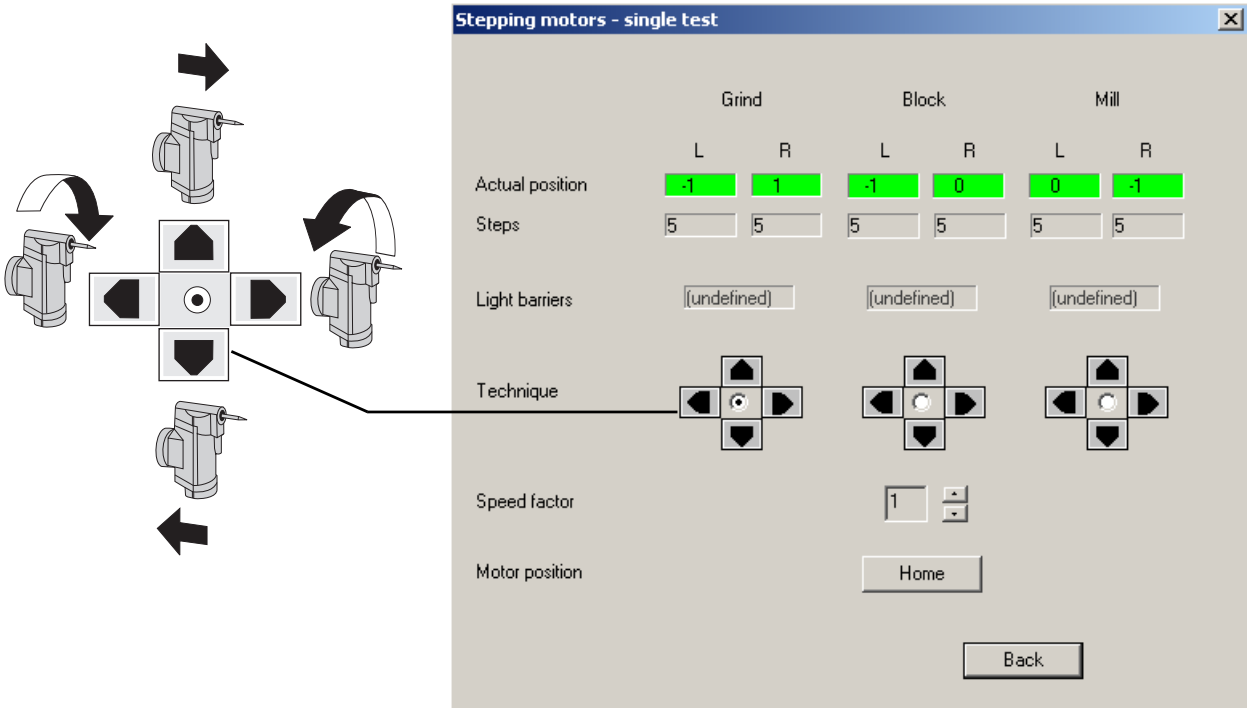

	Grind	Block	Mill
One longitudinal step (L) equals	12.5µm	12.5µm	12.5µm
One rotational step (R) equals	approx. 0.04° (2.5')	approx. 0.13° (7.7')	approx. 0.04° (2.5')

2.3.6 DC Motors "Inlet/Load"

Purpose of Test:

This test serves to run in the DC motors and check them for proper functioning under continuous load.

Procedure

The DC motors are tested through operation at a constant current. The resulting speed provides an indication of the running resistance of the gearing units.

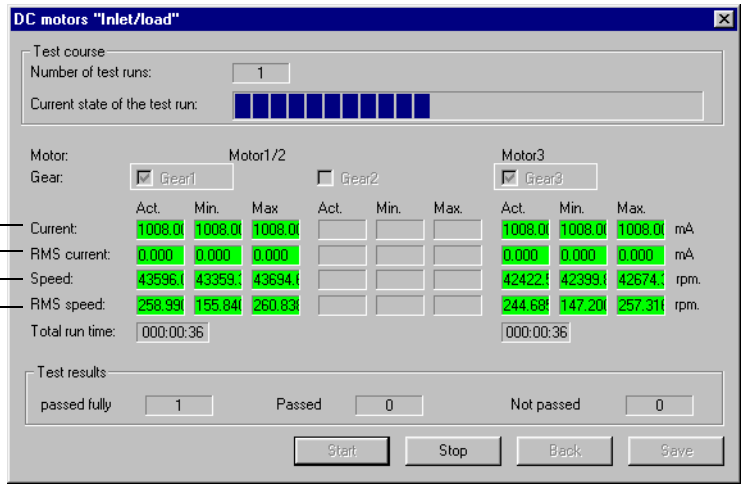

The two motors (Motor 1 and Motor 3) can be selected together or separately. If no motor is selected, the Start button is not active. Default: Both motors selected.

Test Run*:** The test runs in an endless loop until the ***Stop button is actuated. The current measured values are displayed. A test run consists of one part run time and one part pause for each motor.

2.3.7 DC motors "Touch"

Purpose of Test:

This test is used to check the two DC motors for proper functioning in the Low-speed mode.

Procedure

The DC motors are tested by adjusting them to the touch speed (in the relevant directions of rotation). Then the relevant data are determined.

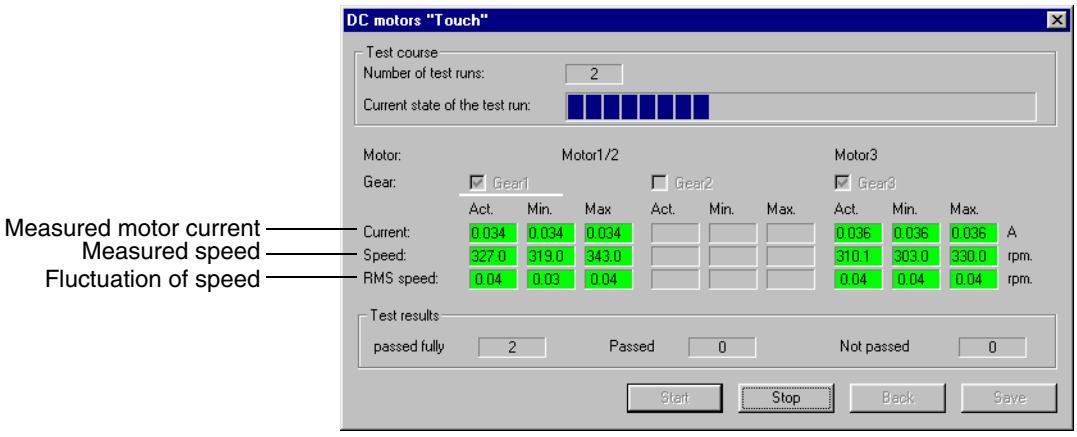

The possible gearing units (1,3) can be selected either together or separately.

The ***Start*** button remains inactive as long as no gearing has been selected. Default: Both motors selected.

2.3.8 DC motors ”Speed”

Purpose of Test:

This test is used to check the two DC motors and their gearings for flawless functioning in the High-speed mode.

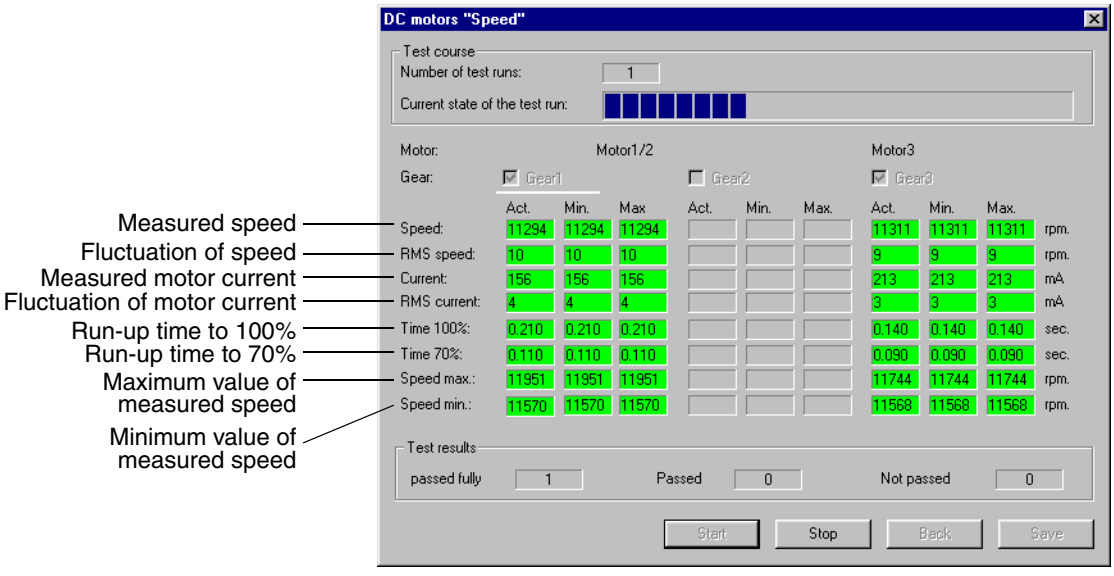

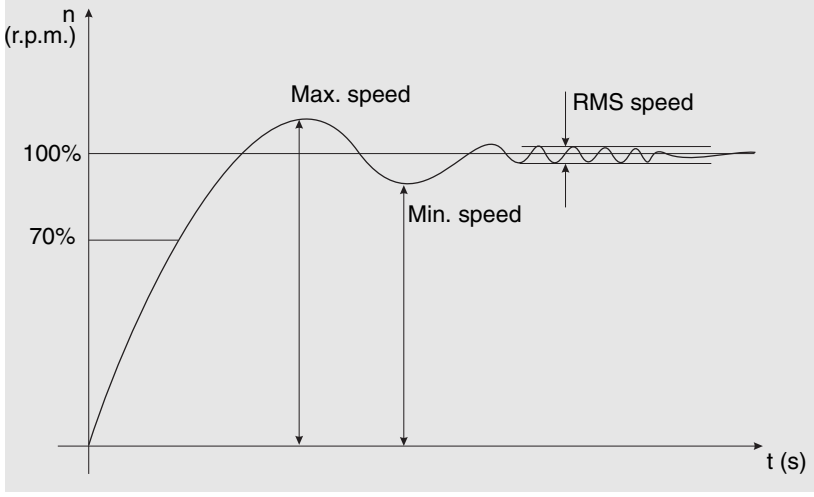

Procedure

The DC motors are tested by accelerating them from a standing start to working speed and then measuring the relevant data.

NOTE

The current is monitored during all measurements. The maximum current must not stop for longer than 2 seconds; otherwise the test will immediately be interrupted by an error message.

2.3.9 Scanner test (Scan)

Purpose of Test:

This test serves to evaluate the functioning and accuracy of the scanner.

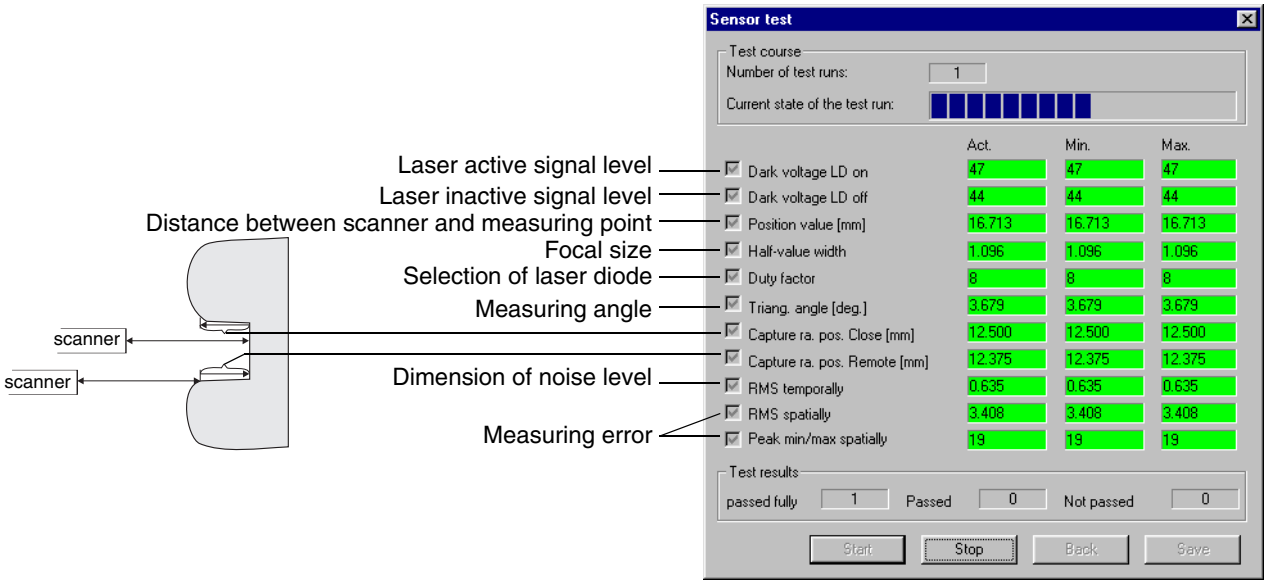

Procedure

The various required measurements are performed with the help of the calibration phantom.

The functions to be tested can be selected in different variations. If no function is selected, the Start button remains inactive. Default setting: Test all functions.

2.3.10 Continuous load

Purpose of Test:

This test serves to simulate a maximum load for the power supply and intentionally heat up the entire system.

All loads can be operated simultaneously. The temperature rise of the system is then measured.

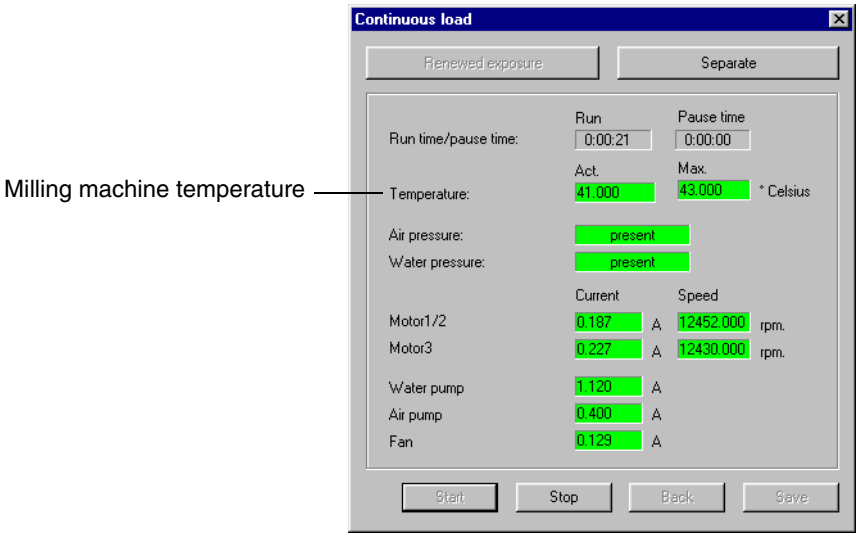

2.3.11 Camera quick test

The camera quick test consists of a series of individual test steps, which can be carried out both in the specified order and individually.

Experienced service technicians!

Some test steps are made up of several partial steps, some of which can be activated individually. These functions should only be used by trained technicians.

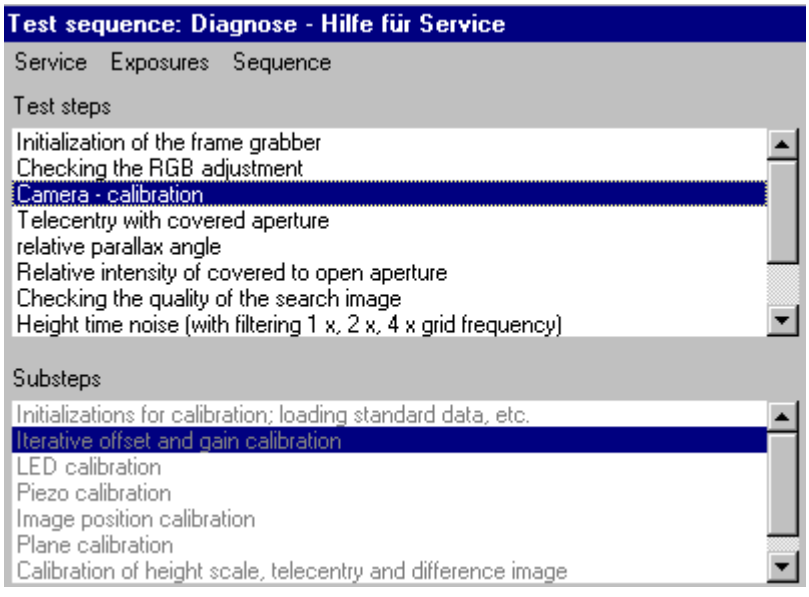

Operate by clicking the buttons in the bottom right-hand section of the screen.

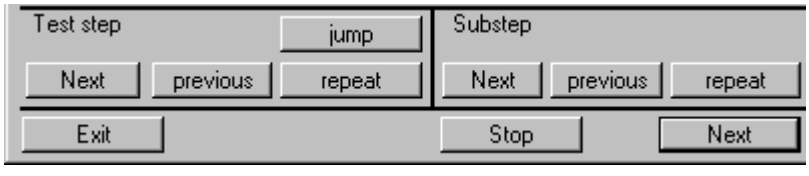

When carrying out the test steps in the specified order, it is easier to use only the ***Next*** button.

NOTE

In many cases "Next" is the same as pressing RETURN.

To select individual test steps, either mark the test step (by clicking it with the left trackball button, to highlight it in blue) and then select ***Jump*** or double click on the test step.

Test steps can also be selected by choosing ***Next***, ***previous*** or ***repeat***. Select ***Stop*** to stop the process. After clicking ***Stop***, the button remains highlighted until the sequence has actually stopped. ***Stop*** then returns to its normal shading and the sequence can be continued by selecting the corresponding buttons.

Select ***Exit*** to exit the test run.

! ***CAUTION***

If you exit the test run without selecting the test step
• "Close Frame Grabber" or
• "Service/Protocol/ Save",
no protocol (log file) is saved.

If a blue dialog box appears, you must select ***Next*** to continue the sequence after following the instructions contained in the box.

Calibration Set A

If Box ***A*** appears, please set Calibration Set **A** to the 3D camera.

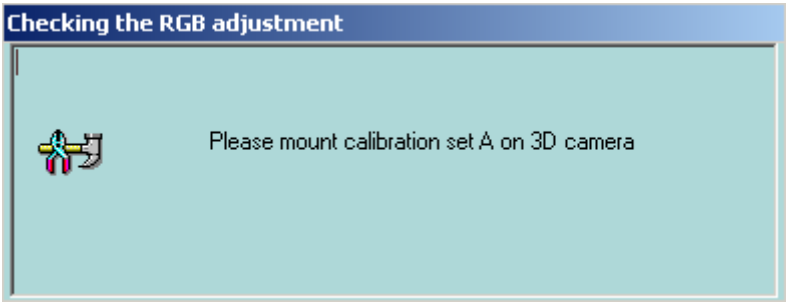

A

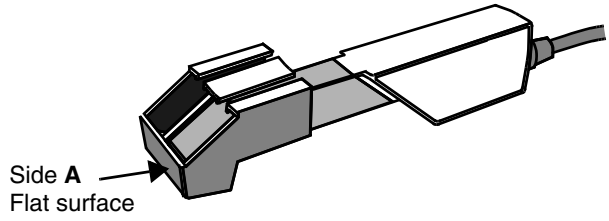

Calibration Set B

If Box ***B*** appears, please set Calibration Set **B** to the 3D camera.

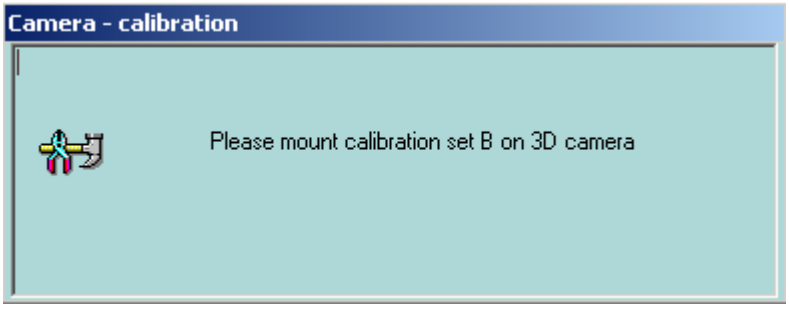

B

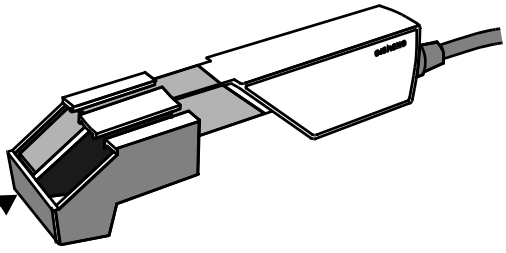

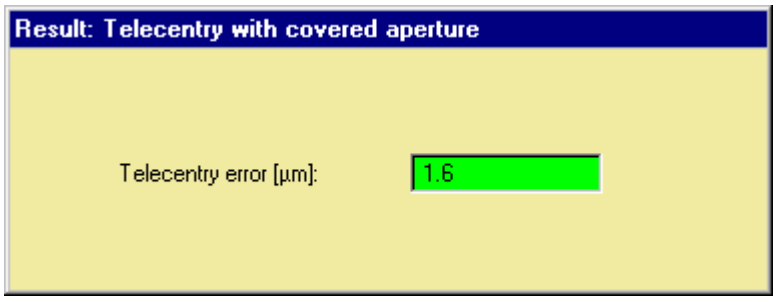

If a yellow results box appears, select ***Next*** to continue the sequence.

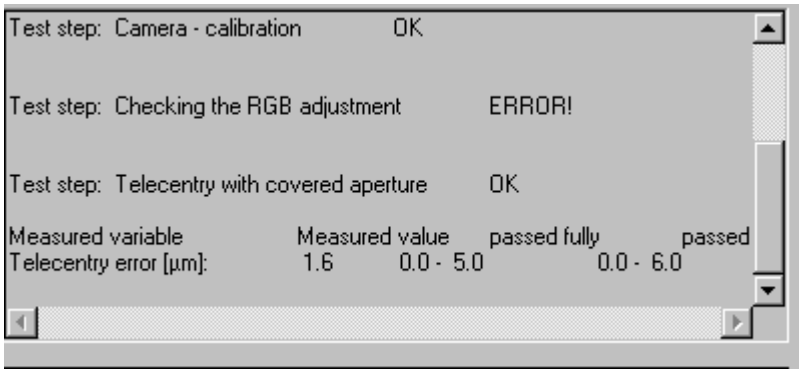

The results of the completed test steps are shown in the LOG box during the sequence.
The entire LOG box can be viewed by scrolling up/down.

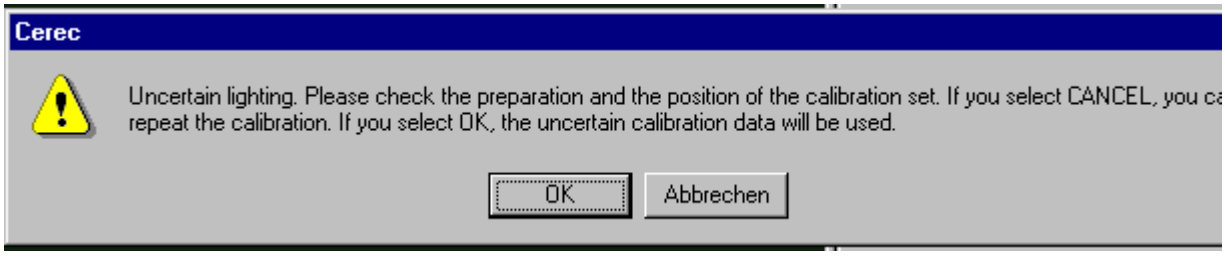

Errors can occur while you are carrying out the test steps. Here, it is important to follow the instructions.

The camera quick test also includes several ***Service functions***, which can be selected in the ***Service*** menu and in the pull-down menus.

NOTE

Service functions can only be selected when the test run is stopped.

To end a service function, select a button to continue the test run (e.g. ***Next***).

Service functions consist of:

- Protocol
- Live image

- Lifting magnet
- LED
- Slide alignment

Protocol

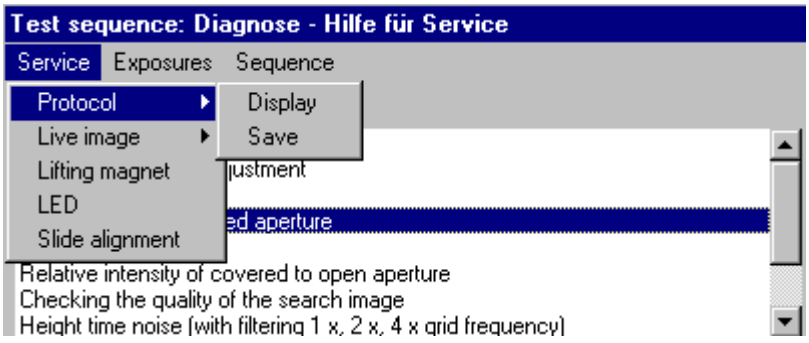

Select ***Service/Protocol/Save*** to create a protocol (log file) during the test run.

To view the protocol, select ***Service/Protocol/Display***.

Select RETURN to close the protocol (log file) display.

Live image

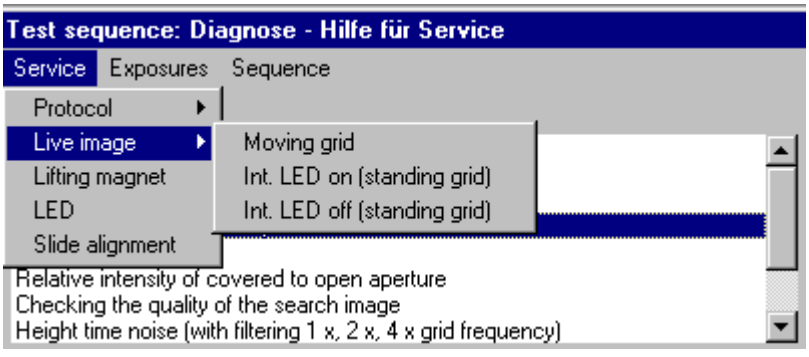

Moving grid = Search image

Int. LED on (standing grid) = Search image with standing grid - visible grid stripes

Int. LED off (standing grid) = Search image with internal LED deactivated, so that objects can only be seen when they are illuminated externally.

Lifting magnet

The lifting magnet is attracted approximately every 3 sec. for a period of approx. 1 sec. A clicking sound can be heard.

LED and ***Slide alignment*** are not required in the camera quick test.

The camera quick test ***Sequence*** comprises the test steps (functions) listed below.

Associated test functions
Initialization of the frame grabber
Checking the RGB adjustment
Camera - calibration
Telecentry with covered aperture
relative parallax angle
Relative intensity of covered to open aperture
Checking the quality of the search image
Height time noise (with filtering 1 x, 2 x, 4 x grid frequency)
Temporal noise in the search image
Entry of the header data
Closing the frame grabber

Camera calibration data obtained from successfully completed tests are saved and used in the following camera quick test. These data are not used for camera operation outside the service program, so that the recording process is not affected by the program.

This also means that the camera must be calibrated before it is used in the camera quick test. This enables the test steps to produce correct results. ***Checking the RGB adjustment*** is the only test step which can produce correct results without the calibration process being completed.

The test results are indicated in three colors: Green = fully passed, Yellow = passed, Red = not passed.

! ***CAUTION***

Failed tests may be due to a badly prepared calibration set. The uniformity of the powder coating should then be checked.
It should also be noted that test failures may be the result of a faulty camera cable or PC drawer (Refer to Chapter 4.14 - 4.16).

In the test step labelled ***Entry of the header data***, a 4-6 figure number must be entered for the serial number (card).

Carrying out the ***Closing the frame grabber*** test step involves generating a protocol of the completed tests to be stored as a file in the \CEREC\SYSTEM\SERVICE\PROTOCOLS folder. The file name includes the date and time of the test as well as the camera serial number, if this was entered in the ***Entry of the header data*** test step. If a test step has been carried out several times, the latest result is entered in the protocol.

2.3.12 Info milling unit

This dialog box contains information on the connected milling unit and the milling times of the burs.

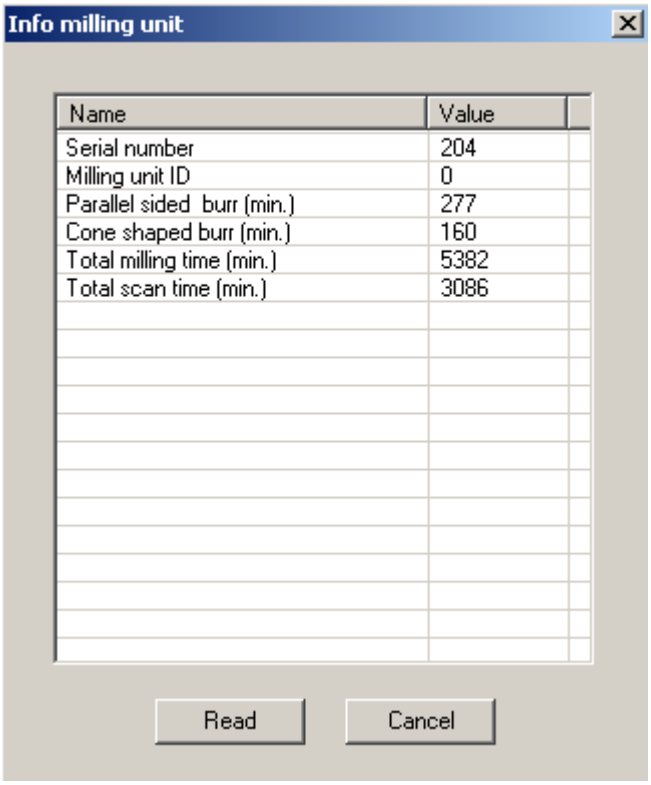

- ***Serial number*** – Serial no. of **CC** PC board
- ***Milling unit ID***:

Identifier 0	= CEREC 3 milling unit / scanner (serial number <5000)
Identifier 1	= CEREC inLab milling unit (serial number ≥5000)
Identifier 2	= CEREC 3 milling unit / scanner (serial number ≥5000)
Identifier ??	= no milling machine connected

- ***Parallel sided burr (min.)***: – elapsed milling time of parallel-sided bur
- ***Cone Shaped (Tapered) burr (min.)***: – elapsed milling time of tapered bur
- ***Total milling time (min.)***: – elapsed milling time of milling unit
- ***Total scan time (min.)***: – elapsed scanning time of milling unit

sirona
The Dental Company

3 Trouble Shooting: Milling Unit

CEREC 3

Trouble Shooting: Milling Unit

List of Contents

3.1 Device cannot be switched ON. Green LED (Ready for operation) not illuminated 3-5
3.2 No connection to PC / acquisition unit. Software cannot be installed..... 3-7
3.3 No air pressure 3-9
3.4 Fan not running. Unit shuts down completely after a short time..... 3-11
3.5 Water pump: Pressure too low 3-13
3.6 Defective light barrier..... 3-15
3.7 Door switch. Please close milling chamber door 3-17
3.8 Motor locking positions: Problems changing grinders 3-19
3.9 Stepping motors (milling unit). Loss of steps..... 3-21
3.10 Touch errors 3-23
3.11 Trouble shooting. Defective CCP board 3-25

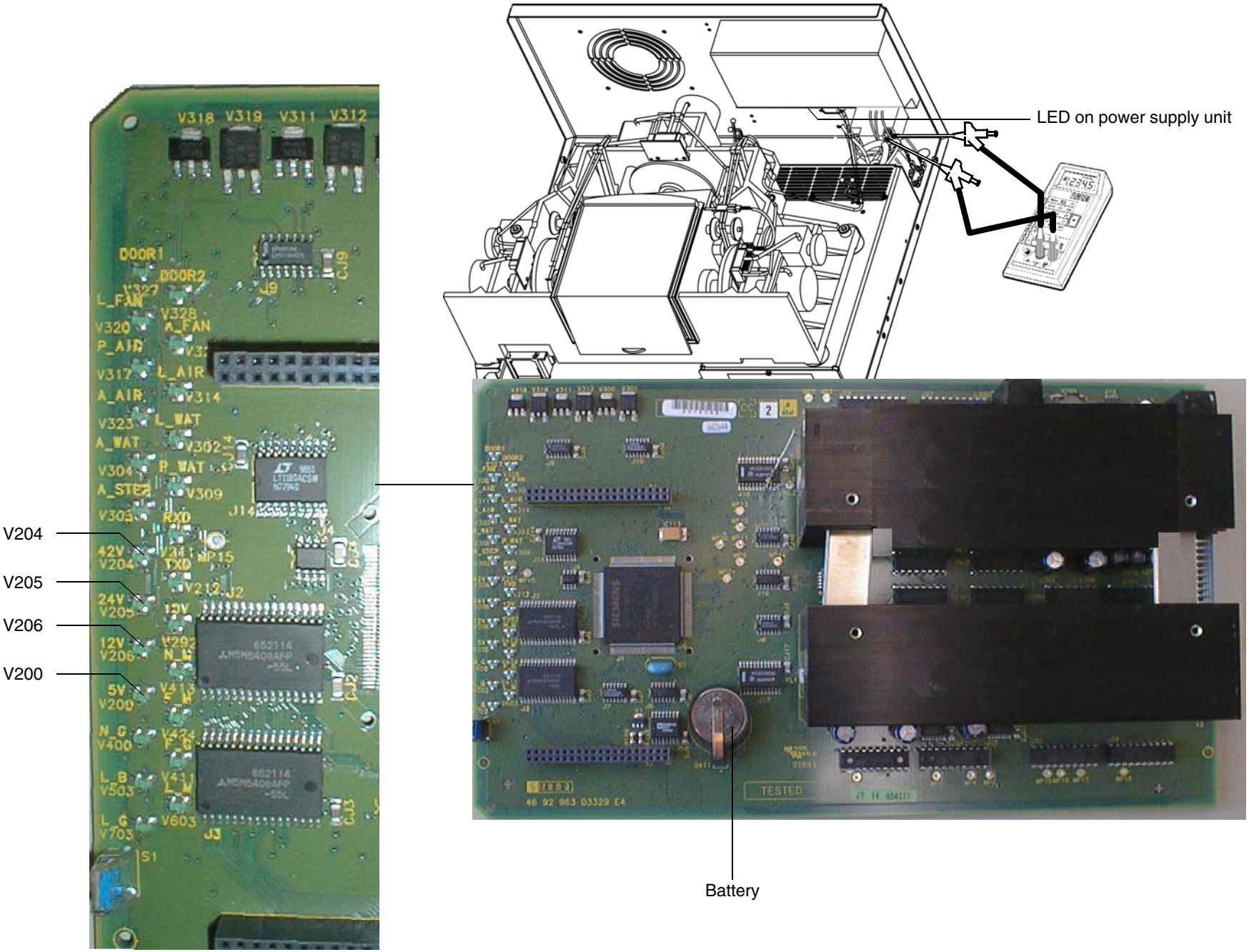
LED on power supply unit
V204
V205
V206
V200
Battery

- Line power supply connected to electric outlet?
- Line voltage fuses OK? If not: Always replace both fuses.
- Check line voltage on power supply unit terminal: 100-240V

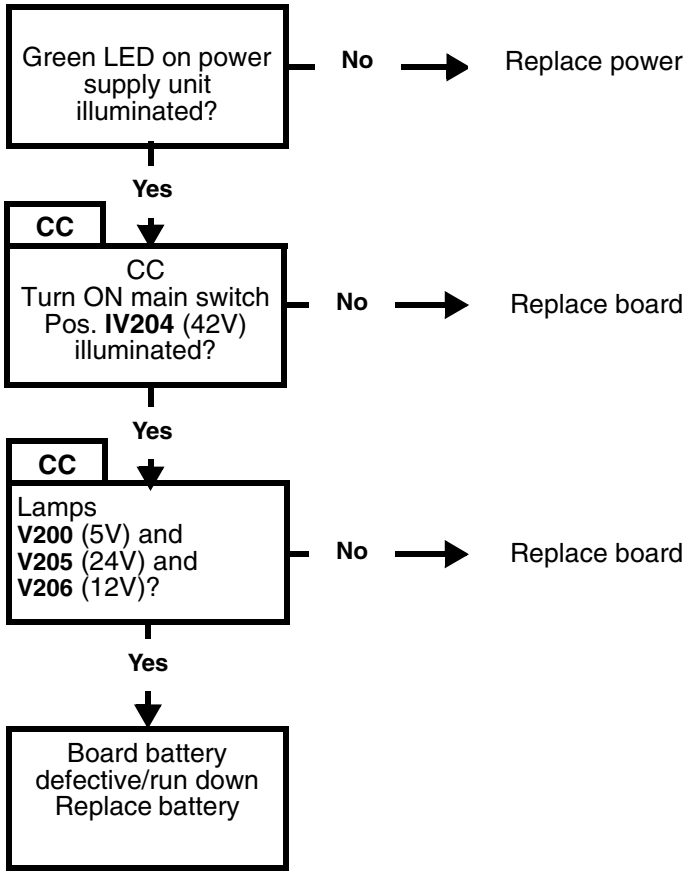

3.1 Device cannot be switched ON. Green LED (Ready for operation) not illuminated

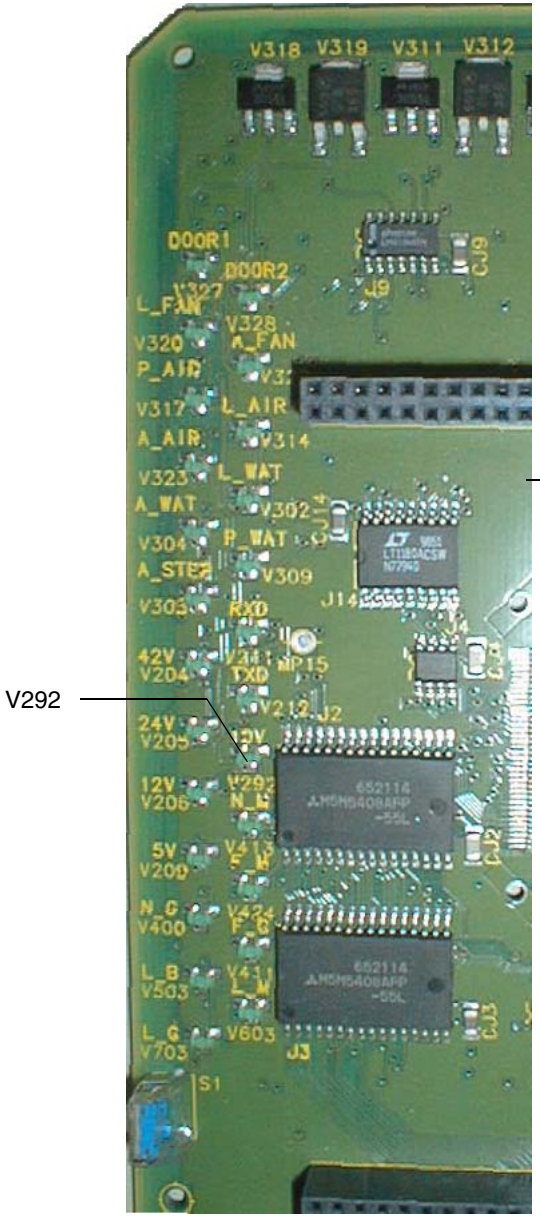
V318
V319
V311
V312
DOOR1
DOOR2
L_FAN
V328
A_FAN
V320
P_AIR
V317
L_AIR
A_AIR
V314
V323
L_WAT
A_WAT
V302
V304
P_WAT
A_STEP
V309
V303
RXD
42V
V204
TXD
NP15
V292
24V
V205
12V
V206
5V
V209
N_G
V400
L_B
V503
L_G
V703
V603
J3
S1
J14
J4
J2
CJ9
CJ2
CJ3

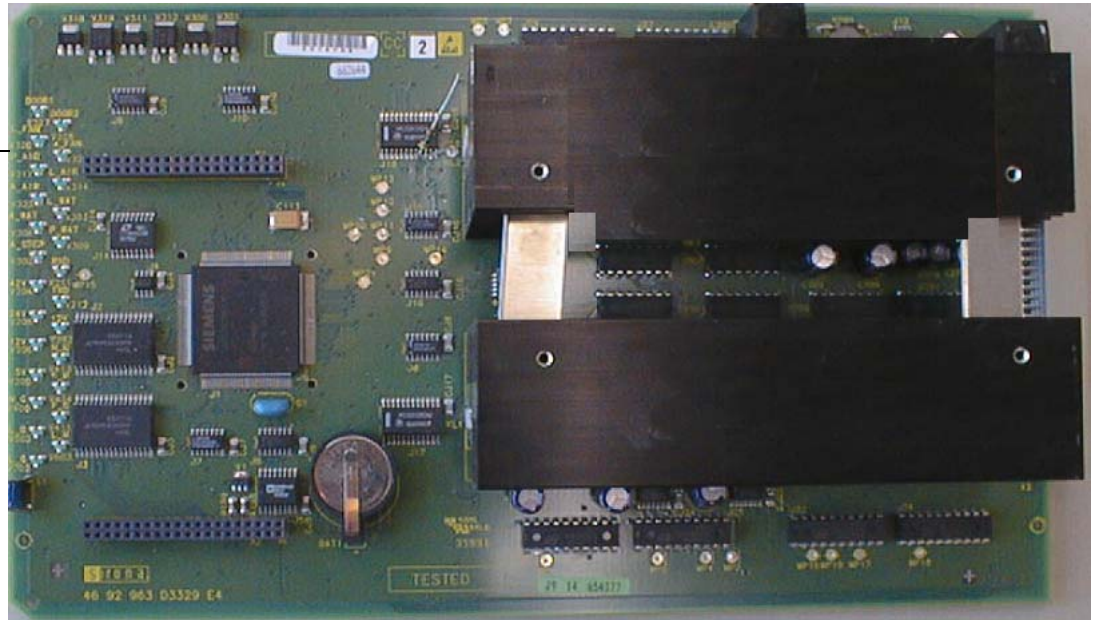
SIEMENS
TESTED

- **CAUTION: Fault may also be on PC/acquisition unit.**
- Check ***configuration*** in the ***Communication*** menu.

1. Cable version → Check:

- Serial connecting cable
- Interface settings on PC / acquisition Unit

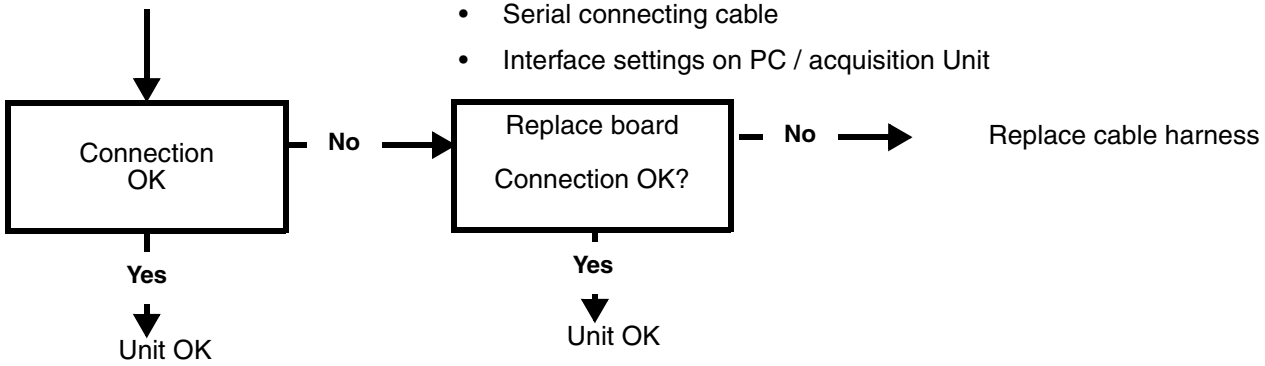

2. Radio controlled version
NOTE: When updating software, it may be necessary to make several (2-3) attempts at starting.

→ Check:

- Interface settings on PC / acquisition unit

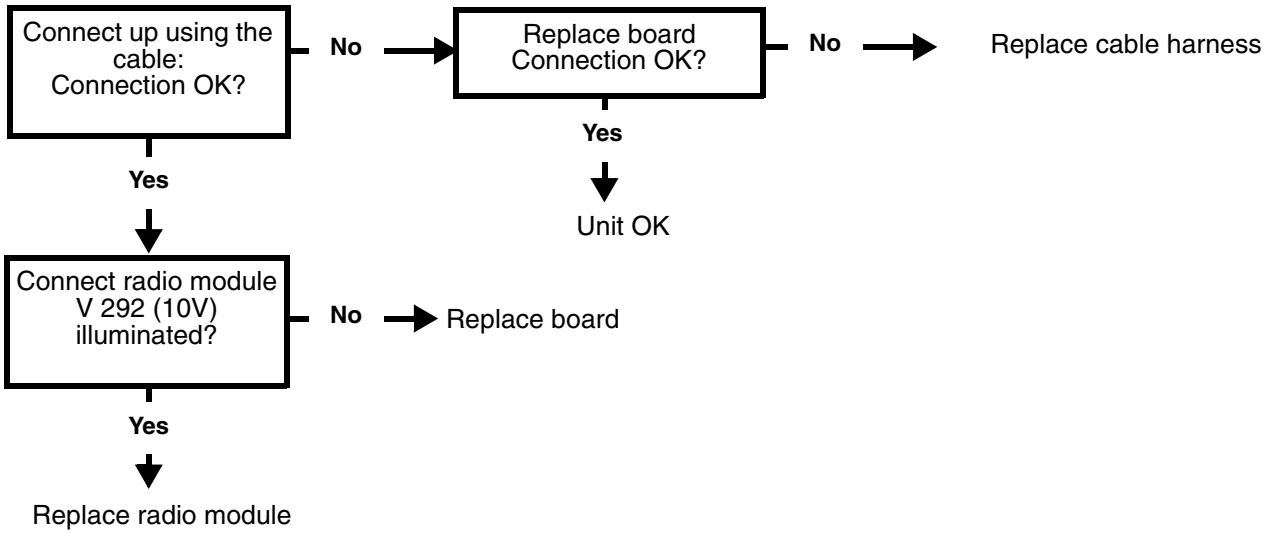

3.2 No connection to PC / acquisition unit. Software cannot be installed

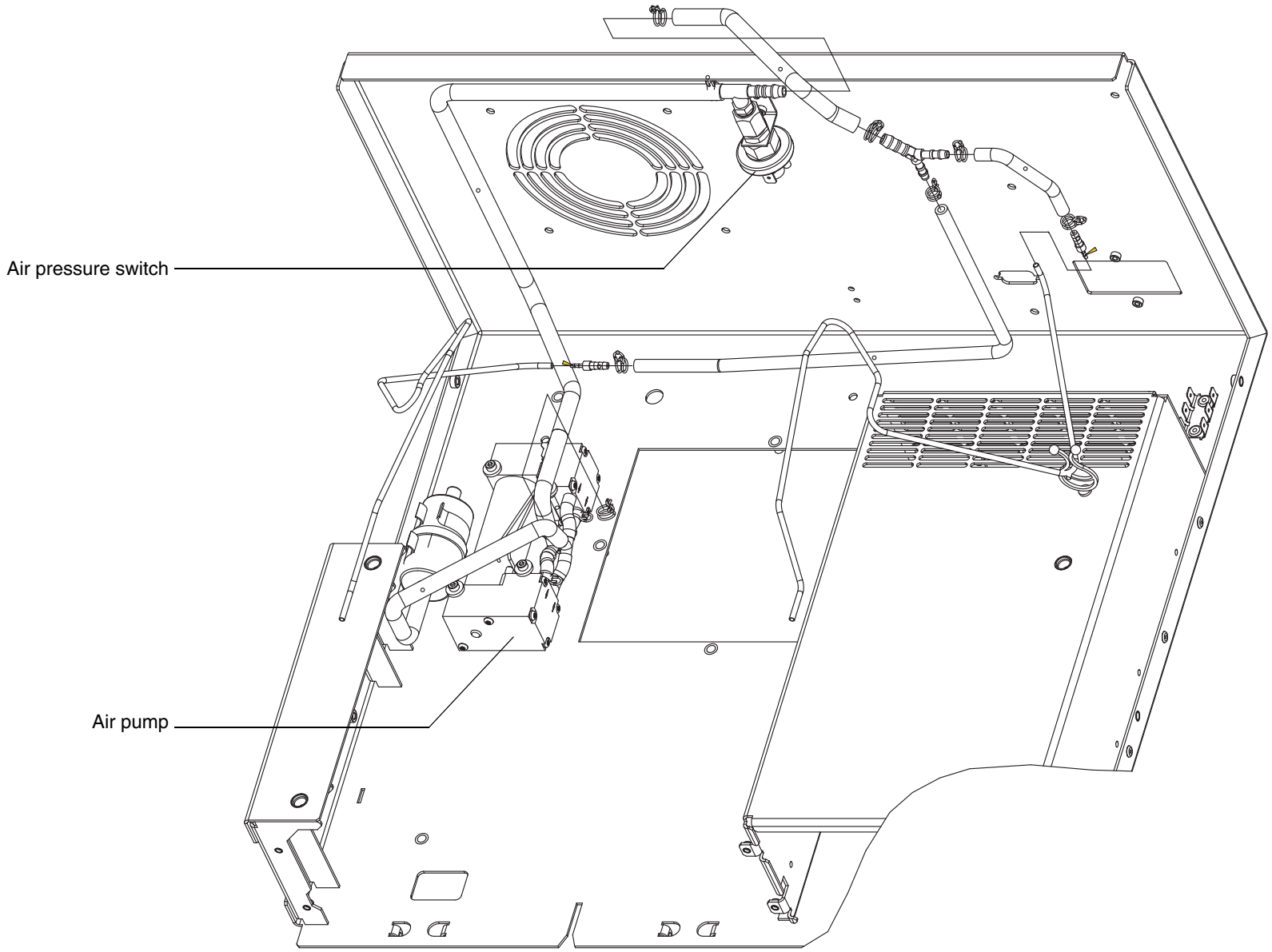
Air pressure switch
Air pump

- Select Settings/Service/Test selection/Media supply/***Air pump*** (☝ see page 2 - 10) Carry out test

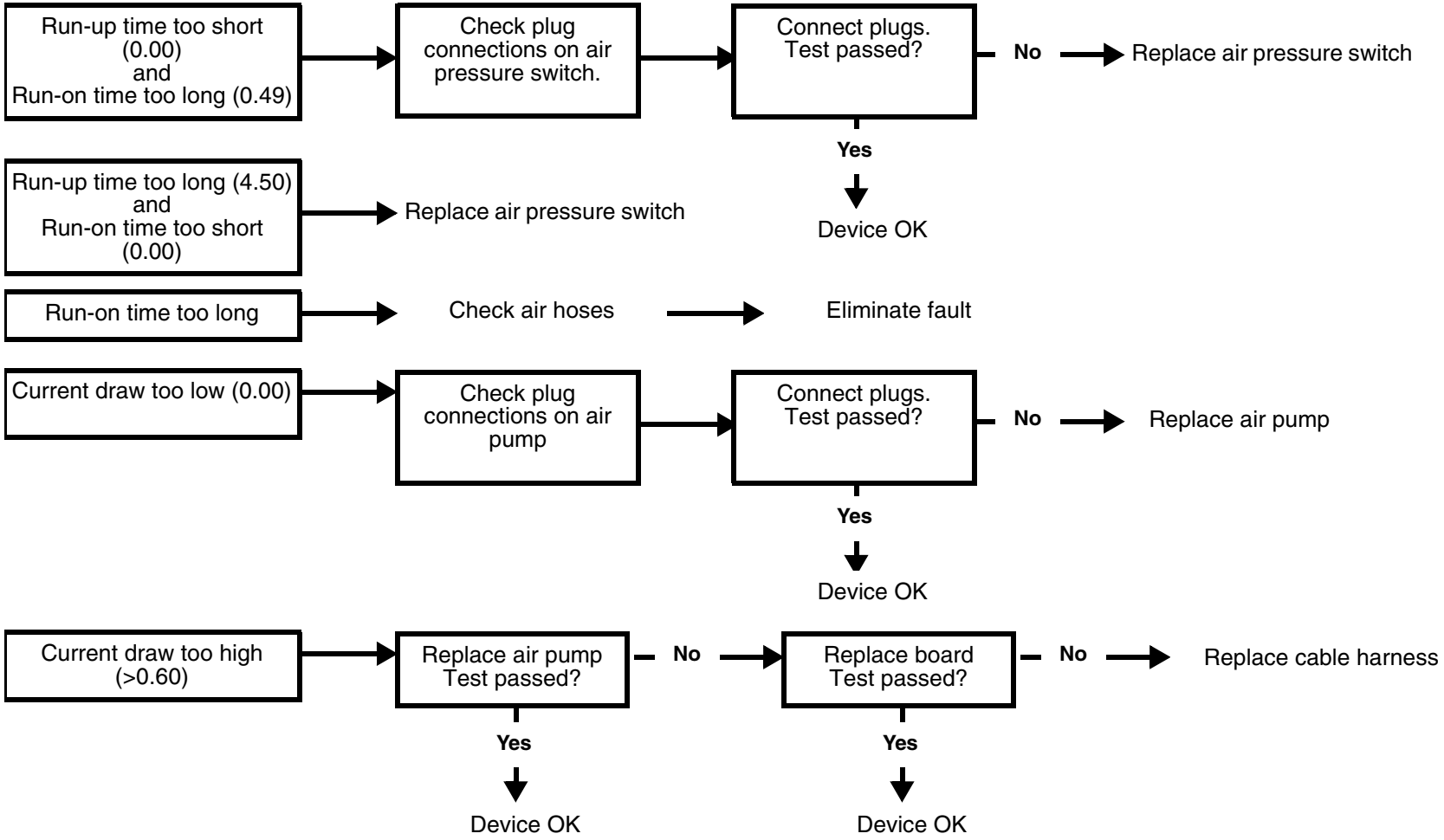

3.3 No air pressure

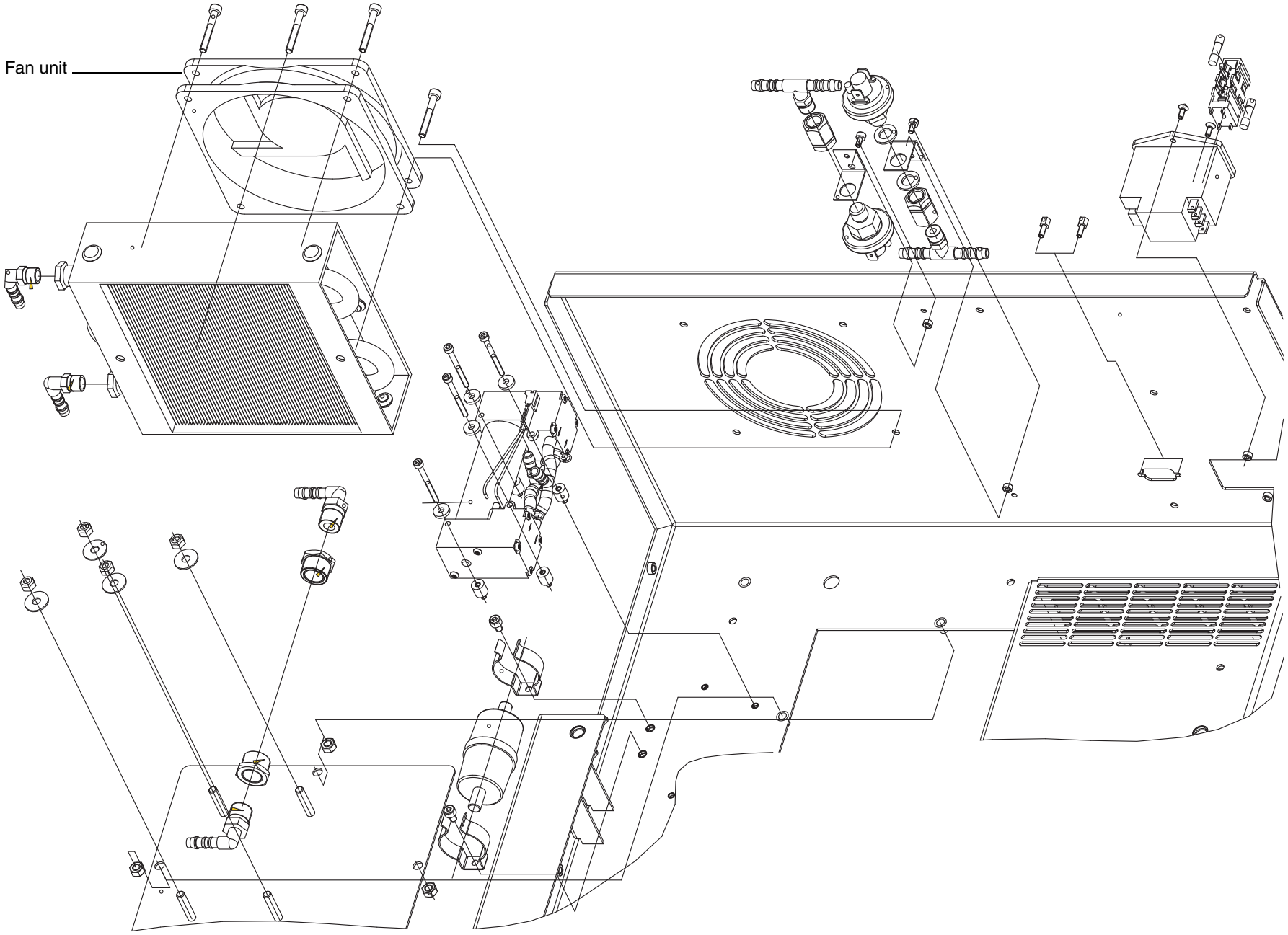
Fan unit

- Select Settings/Service/Test selection/Media supply/***Fan unit*** (☝ see page 2 - 10) Carry out test

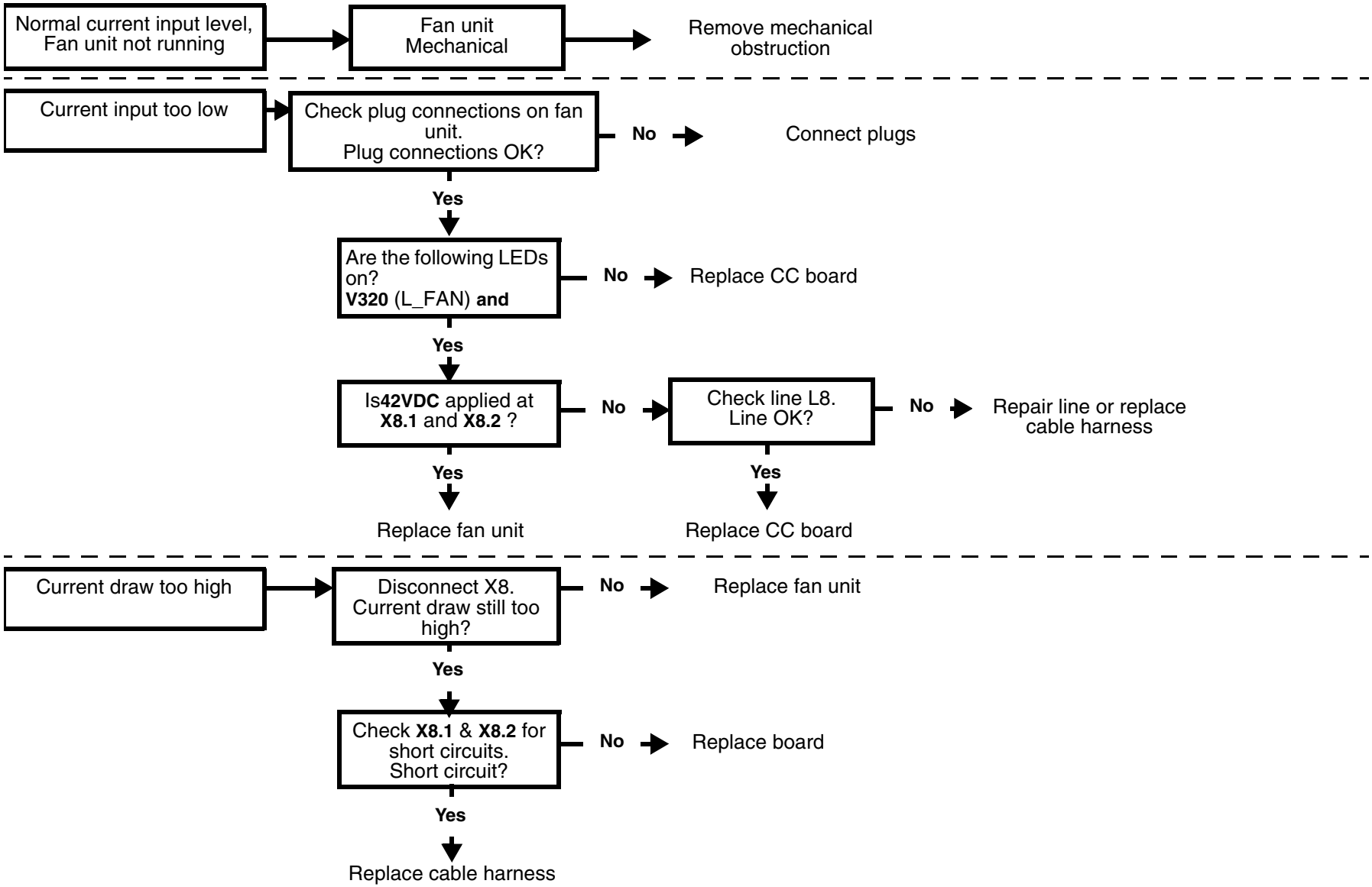

3.4 Fan not running. Unit shuts down completely after a short time

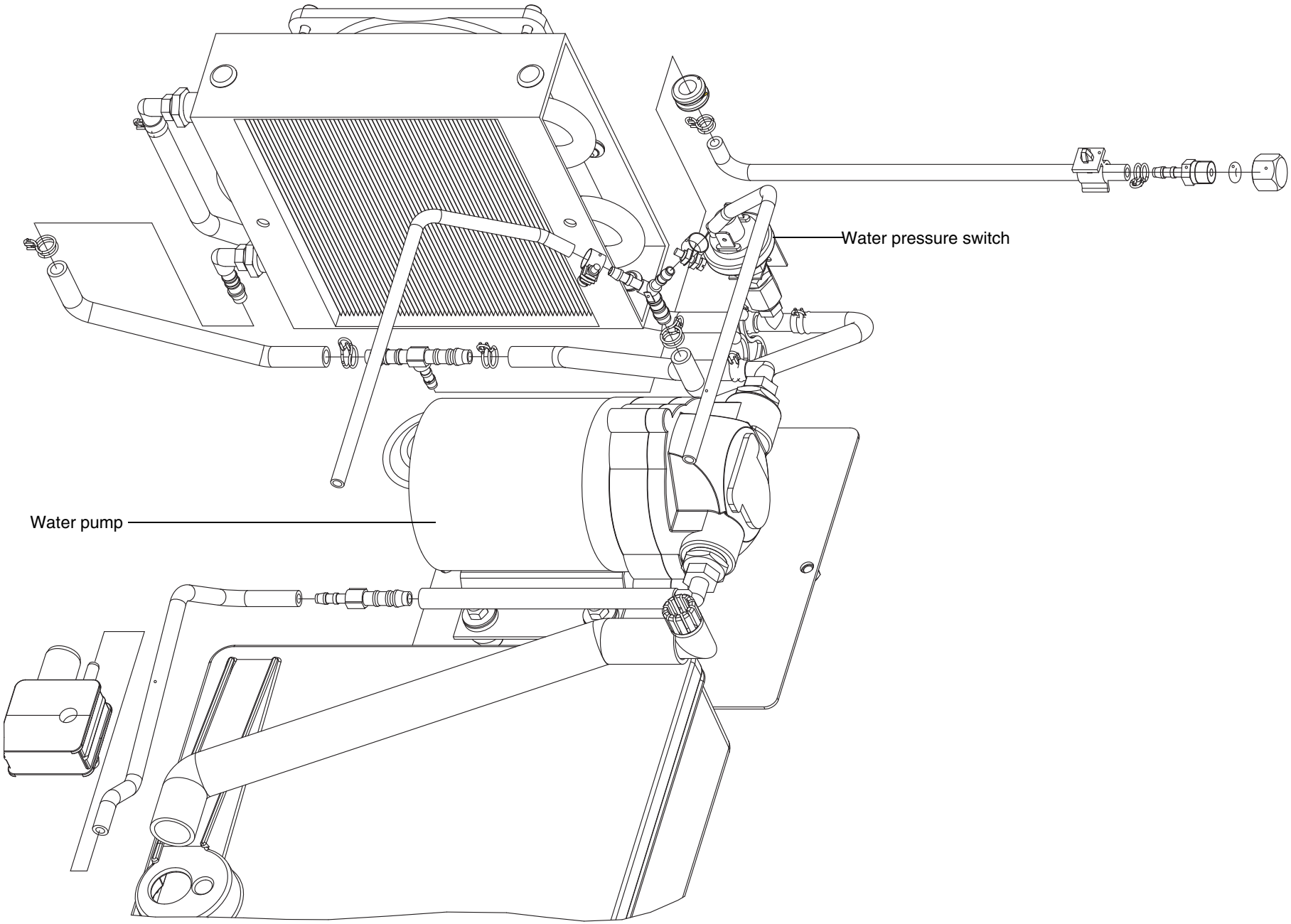
Water pressure switch
Water pump

- Preliminary test: Water tank full. Tank connection button locked in place
- Select Settings/Service/Test selection/Media supply/***Water pump*** (☝ see page 2 - 10) Carry out test

If the test is not passed, a "damping box upgrade kit" must be ordered. Order No.: 58 85 673

3.5 Water pump: Pressure too low

V503
L_B
V703
L_G
V503
L_M

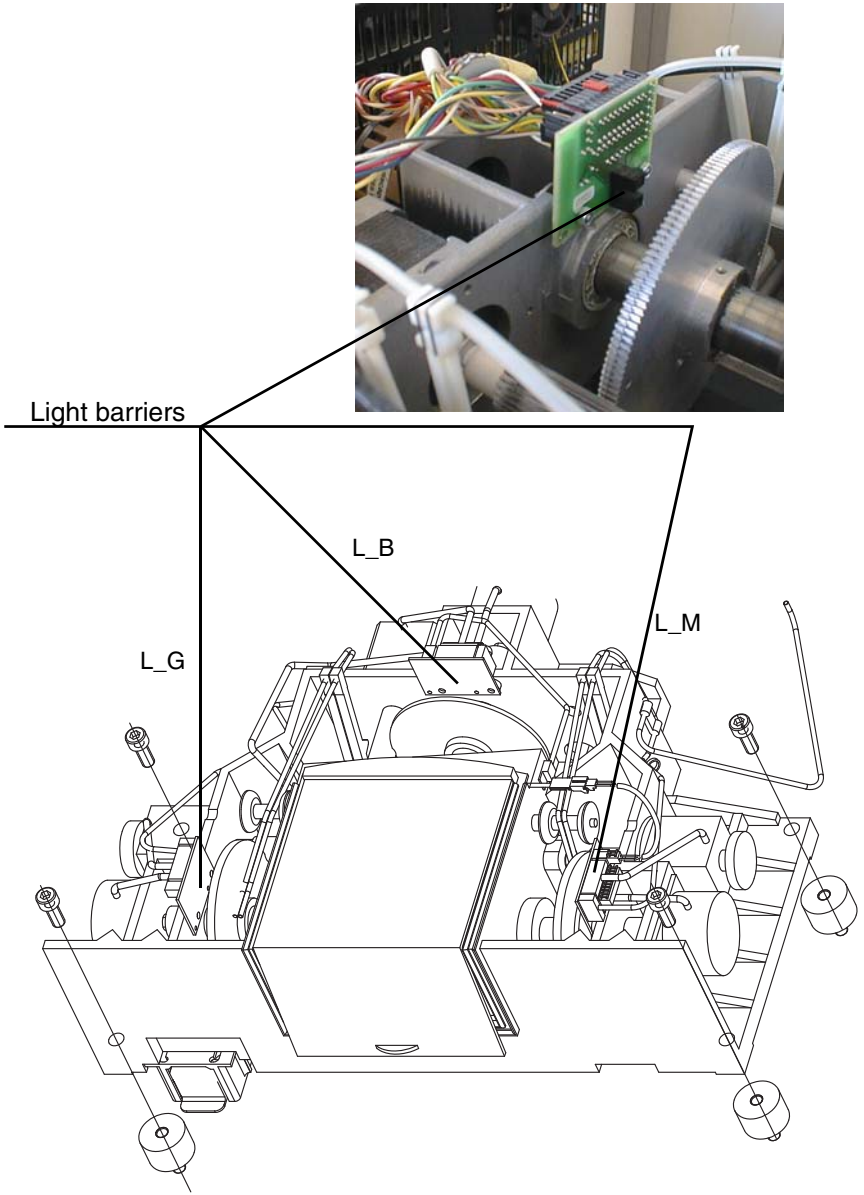
Light barriers
L_B
L_M
L_G

- Select Settings/Service/Test selection/Light barriers, …/***Light barriers*** (☝ see page 2 - 12) Carry out test.

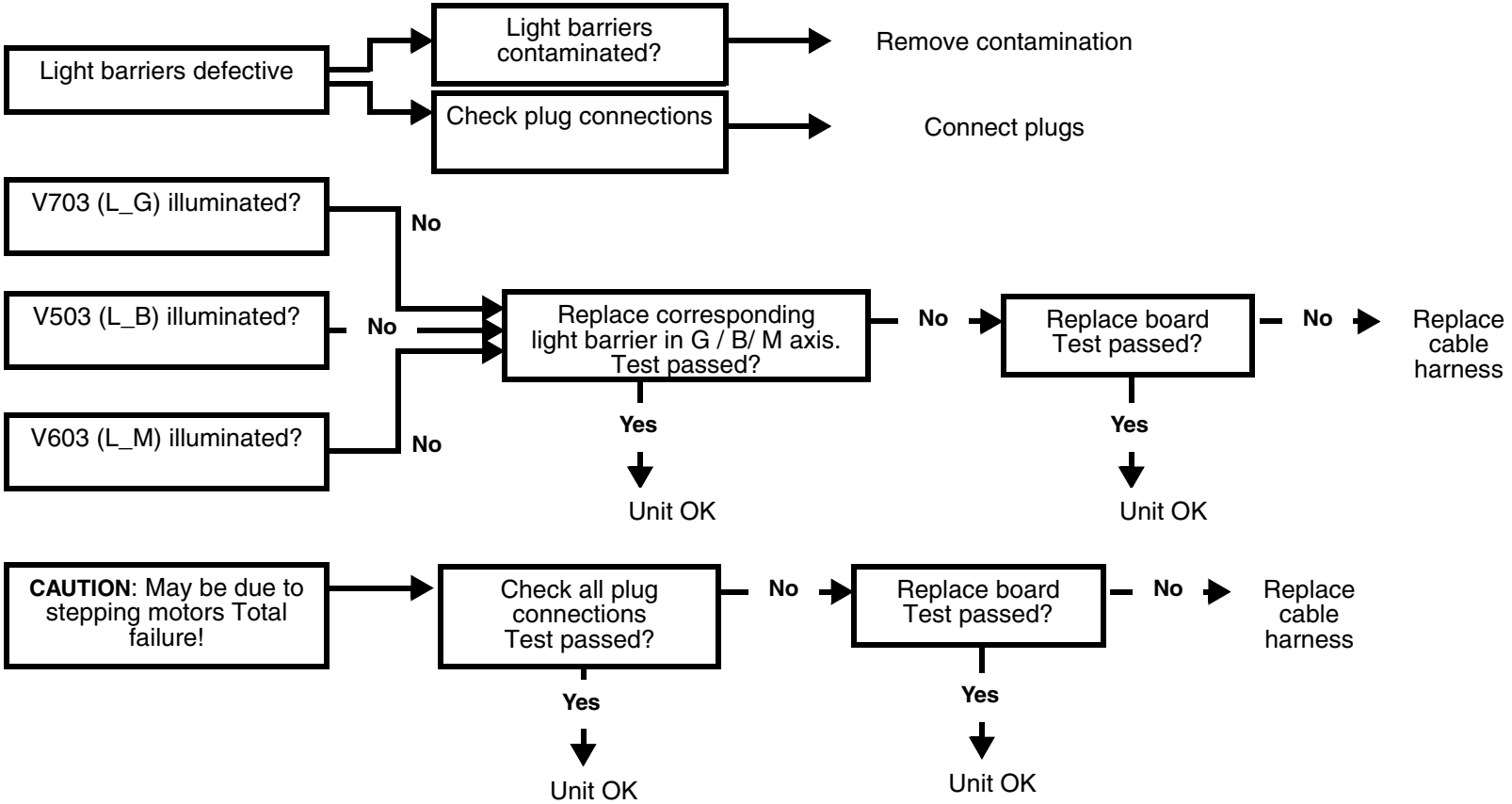

3.6 Defective light barrier

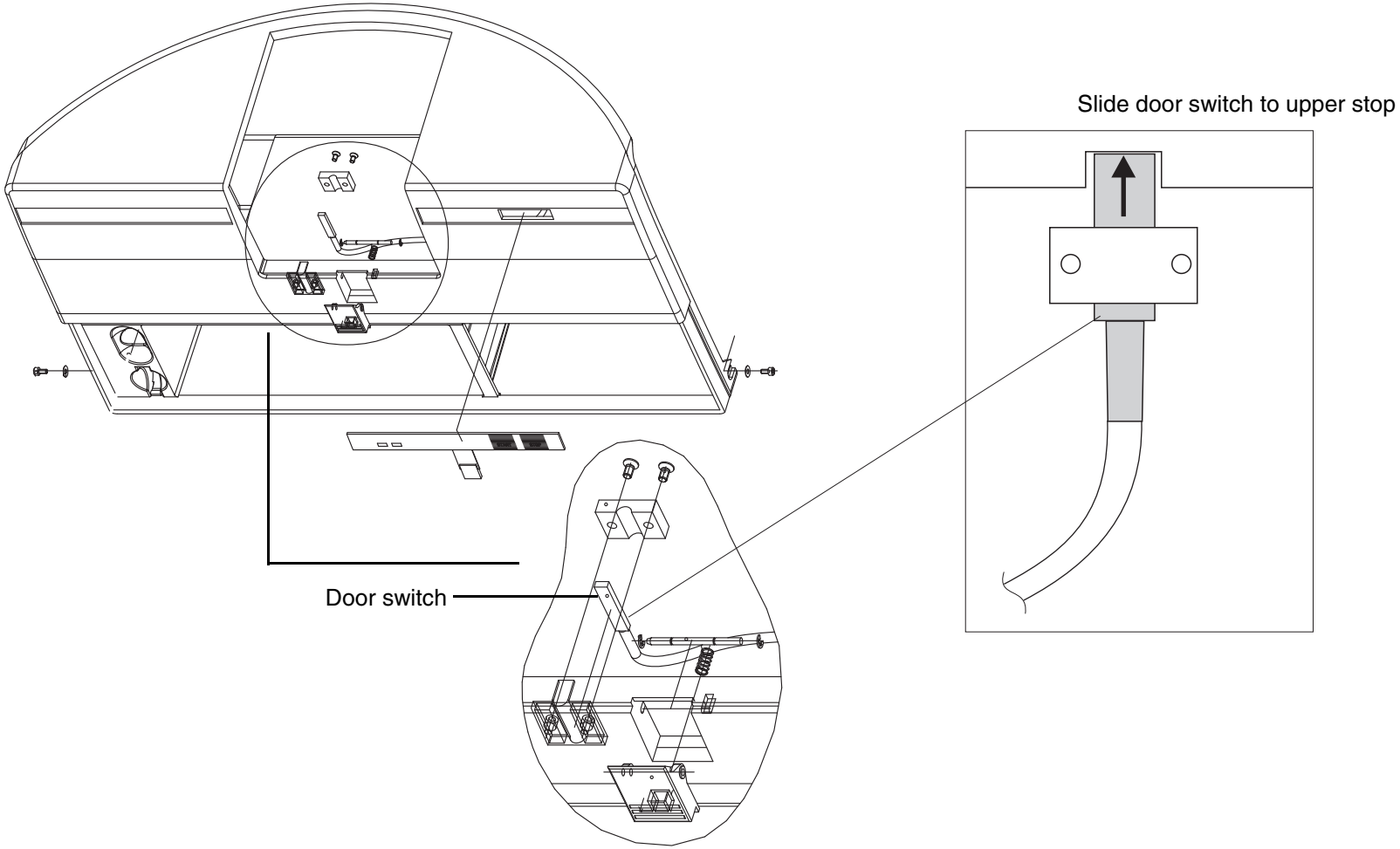
Slide door switch to upper stop
Door switch

- Select Settings/Service/Test selection/Light barriers, …/***Door switch/Operating keys*** (☝ see page 2 - 12) Carry out test

Test the door switch function:

- When the milling chamber door is opened at both contacts, "***Open***" must appear in the display before the door has moved a distance of 5 mm.
- When the milling chamber door is closed at both contacts, "***Closed***" must appear in the display before the door is locked in place.

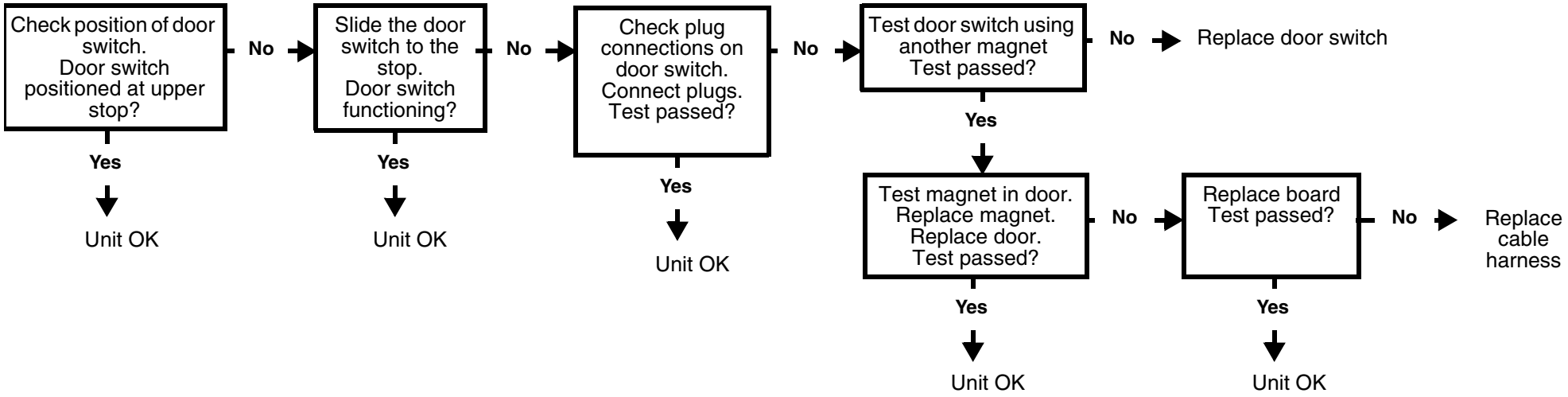

3.7 Door switch. Please close milling chamber door

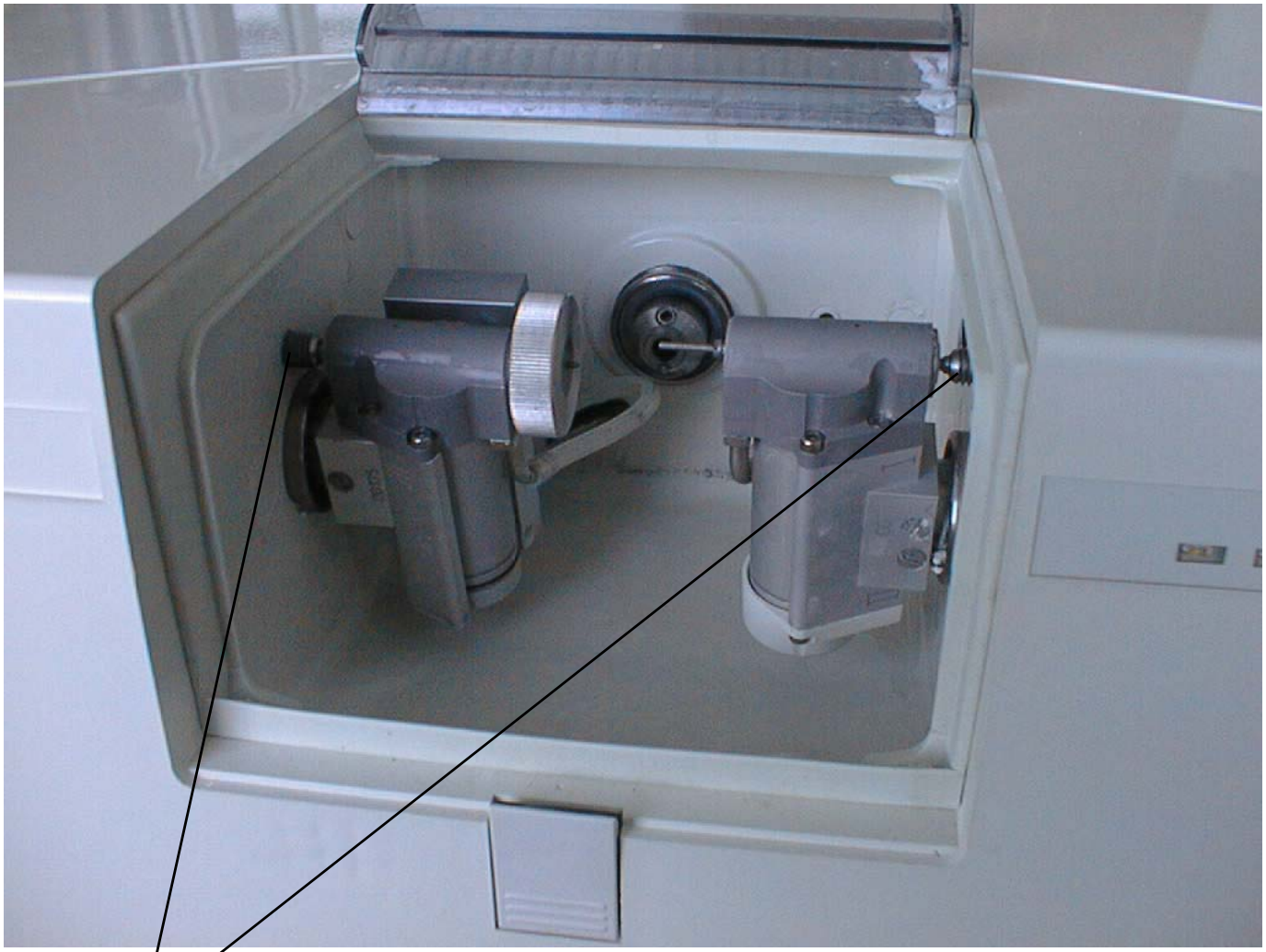

Locking pins

- Select Settings/Service/Test selection/Light barriers, …/***Motor stop positions*** (☝ see page 2 - 13) Carry out a test.
- Move grinder to stop position. Replace grinder

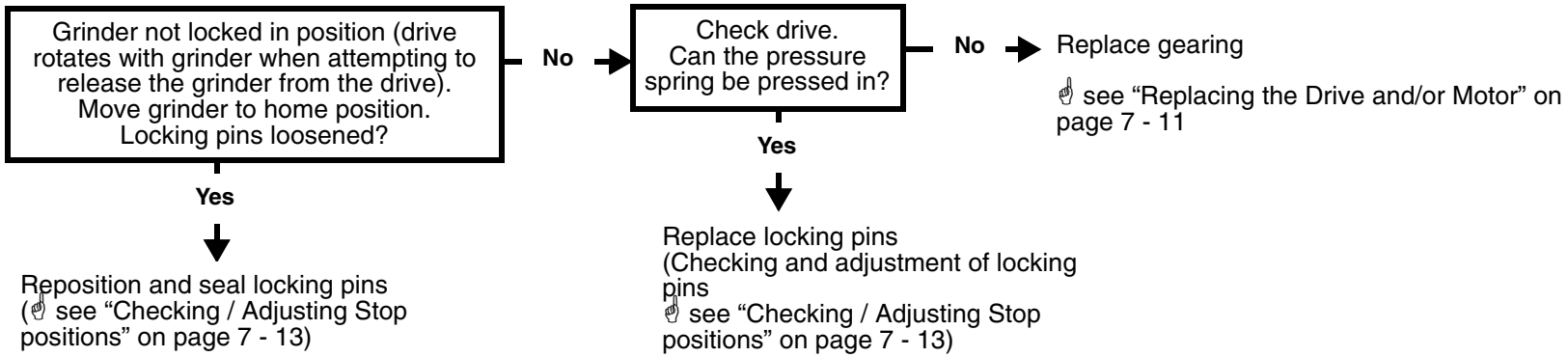

3.8 Motor locking positions: Problems changing grinders

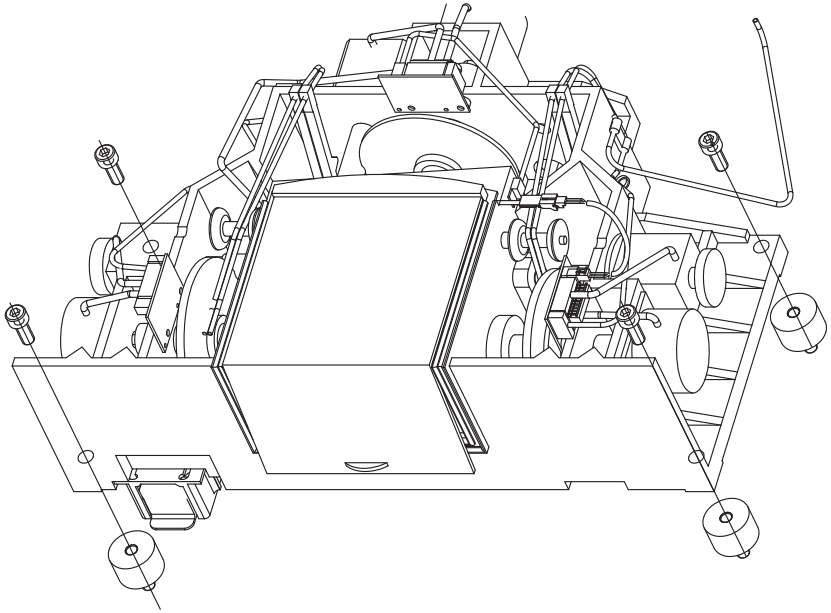

- Select Settings/Service/Test selection/***Stepping motors*** (☝ see page 2 - 14) Carry out test

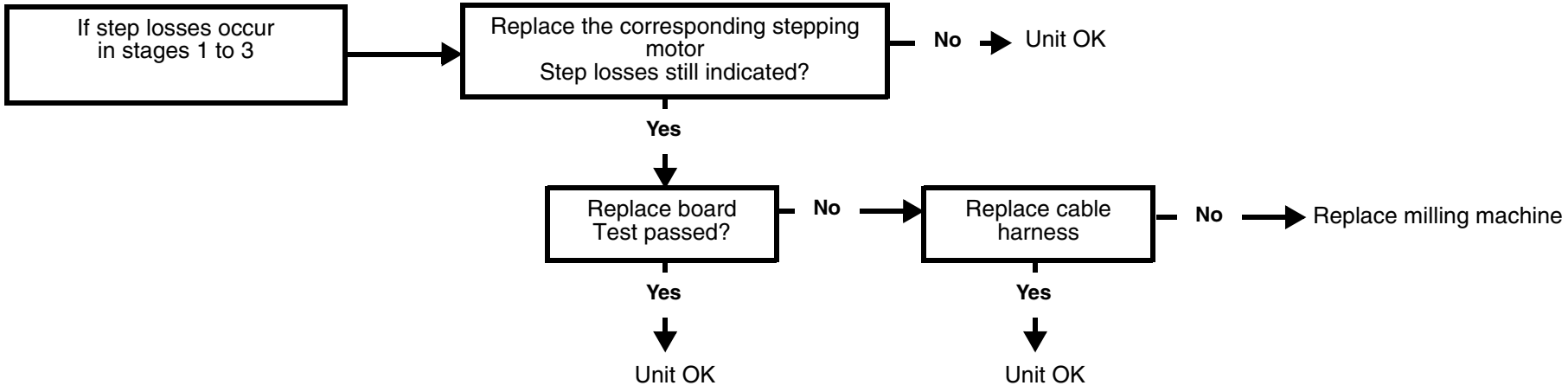

3.9 Stepping motors (milling unit). Loss of steps

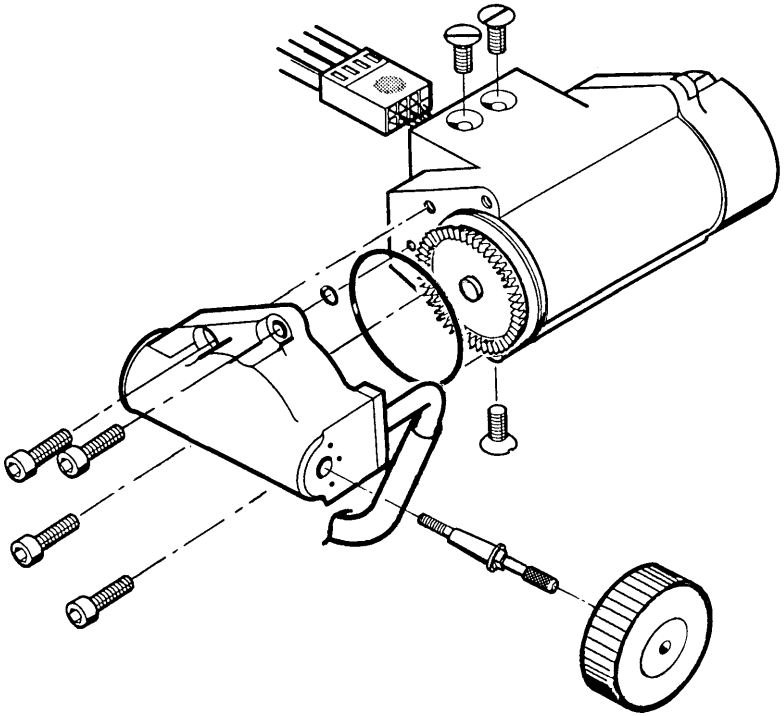

- Select Settings/Service/Test selection/***DC Motors "Touch"*** (☝ see page 2 - 16) Carry out test

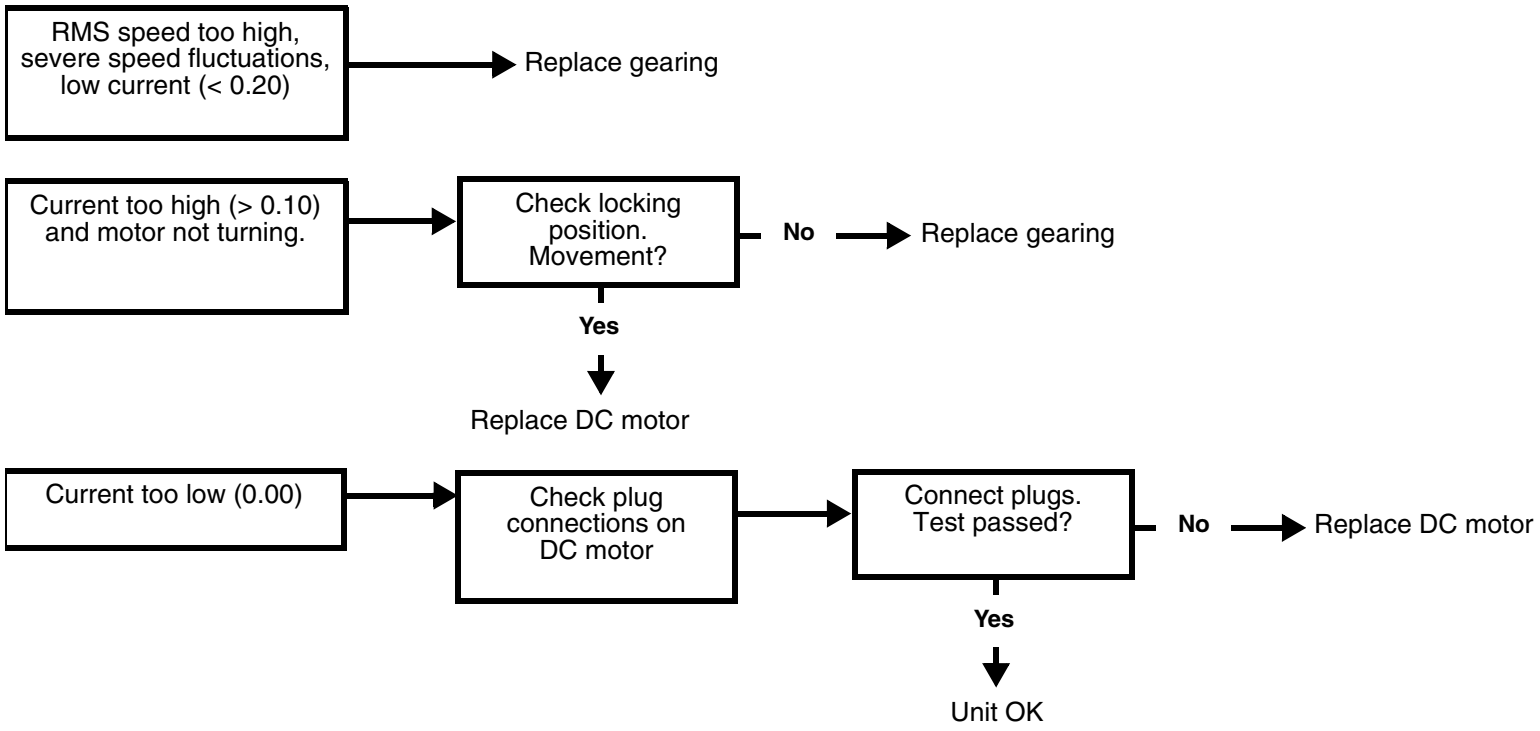

3.10 Touch errors

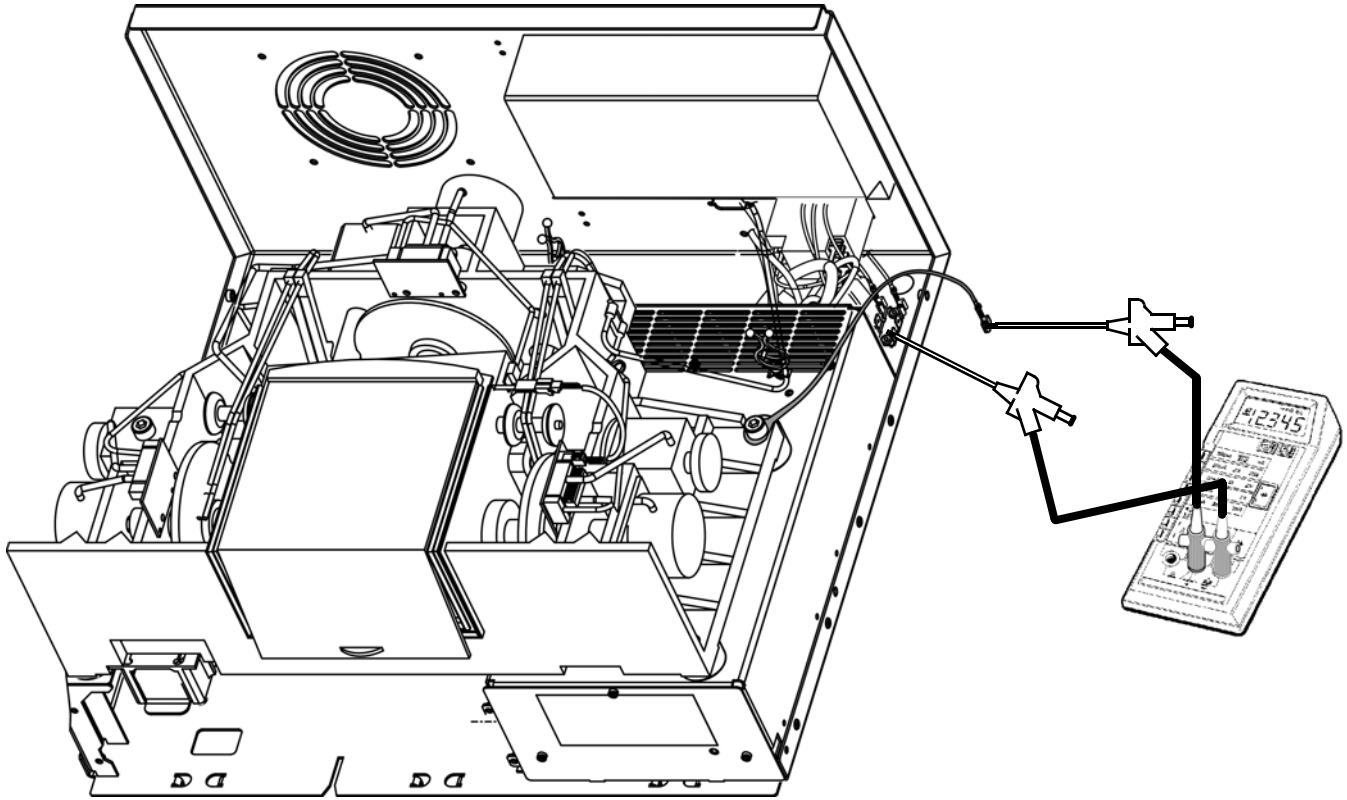
12345

NOTE: If a CCP board is defective, it must be assumed that this is due to a defective motor rather than a fault on the CCP board.

The motors must therefore be checked first of all.

Do the following:

1. Remove the milling machine PE conductor connector from the bus point.

2. Connect the measuring device between the milling machine PE conductor connector and the PE conductor bus point (DC voltage > 50 V).

NOTE: In all the following tests:

– No fault: U: < 3 V

– Fault: U: > 3 V

3. Install a new CCP board.

4. Switch on the unit.

Carry out a stepping motor test

5. Defective motor test (interwinding fault to ground). Adjust voltage to approx. 39V.

DC motor test (run-in / load)

6. If the defective motor (interwinding fault to ground) is tested, a voltage of approx. 22V results.

Other causes

7. If approx. 5V is registered, this indicates a defective light barrier, milling chamber lighting or Hall sensor on one of the DC motors.

8. Locate the cause by disconnecting the individual leads.

9. Switch off the unit. Disconnect from the line power supply.

10. Replace the corresponding part and repeat the test.

11. CAUTION: After repairing the PE conductor - milling machine connection to PE conductor - reconnect the bus point.

sirona
The Dental Company

4 Trouble shooting: Acquisition Unit

CEREC 3

Trouble shooting: Acquisition Unit

List of Contents

4.1 System cannot be switched ON 4-7
4.2 PC not booting properly I 4-9
4.3 PC not booting properly II 4-11
4.4 PC does not respond during switch-on, PC power supply does not start 4-12
4.5 Further PC faults 4-14
4.6 Monitor image flickering 4-15
4.7 No monitor display 4-17
4.8 Incorrect monitor display format size 4-19
4.9 Monitor: Color shade/gray scale is too weak 4-21
4.10 Trackball not functioning 4-23
4.11 Trackball buttons not functioning 4-25
4.12 Pedal not functioning 4-27
4.13 Keyboard not functioning /defective 4-29
4.14 No camera image 4-31
4.15 Incorrect measuring sensor setting 4-33
4.16 Camera calibration: messages 4-35

4.17 Interference at radio interface 4-37
4.18 No sound or sound level too low 4-41
4.19 No Sirocam camera image 4-43
4.20 Sirocam camera image interference 4-45
4.21 SIROCAM camera: Incorrect image settings 4-47
4.22 Digital X-ray problems 4-49

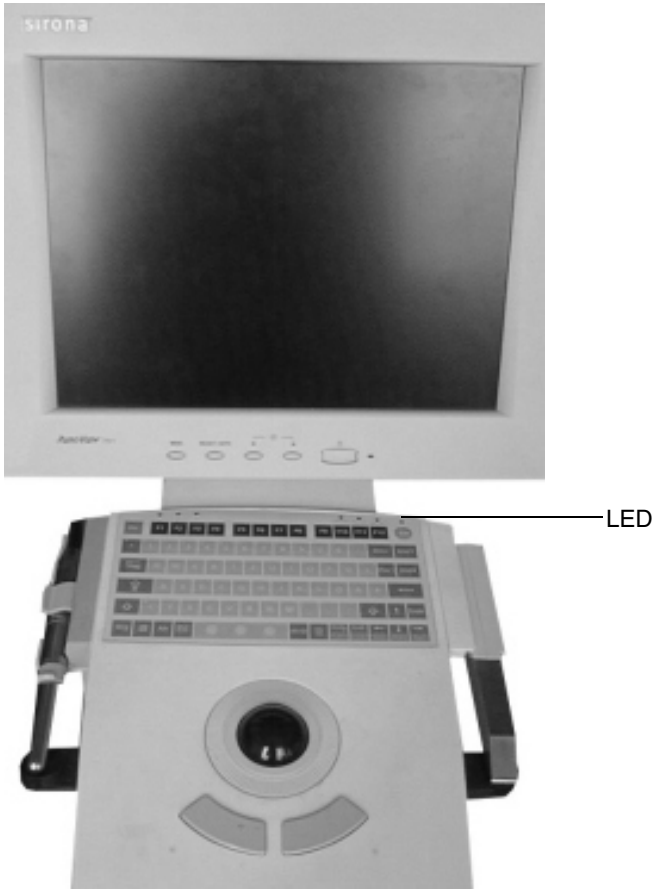
sirona
LED

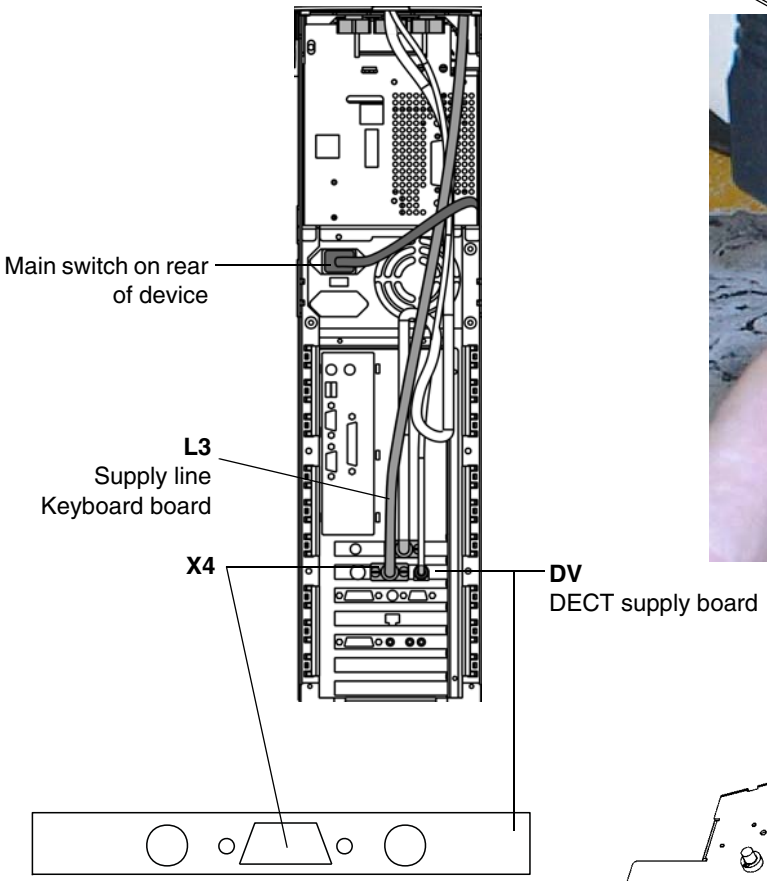
Main switch on rear of device
L3
Supply line
Keyboard board
X4
DV
DECT supply board

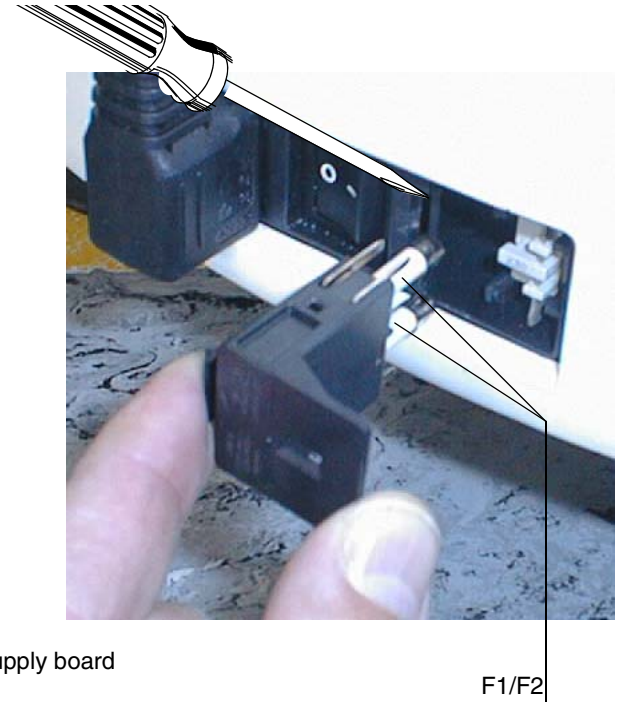
F1/F2

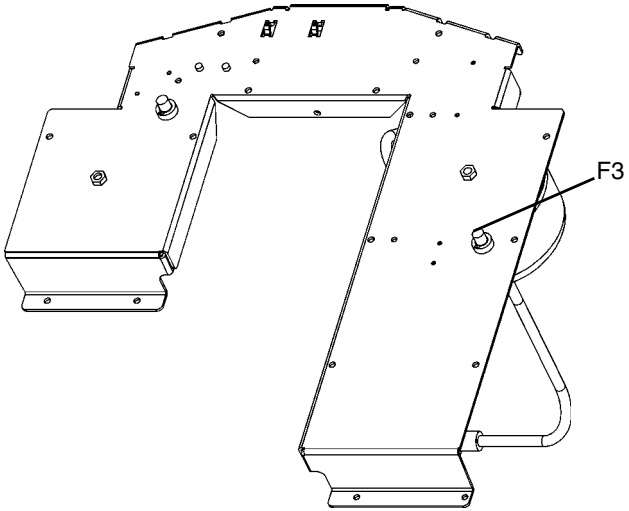
F3

- Line power supply connected to socket?
- Power plug connected?
- Power switch on rear of unit switched ON?
- Power cable attached to PC drawer?
- Keyboard board cable plug **X4** connected to DECT power supply board (**DV**)?

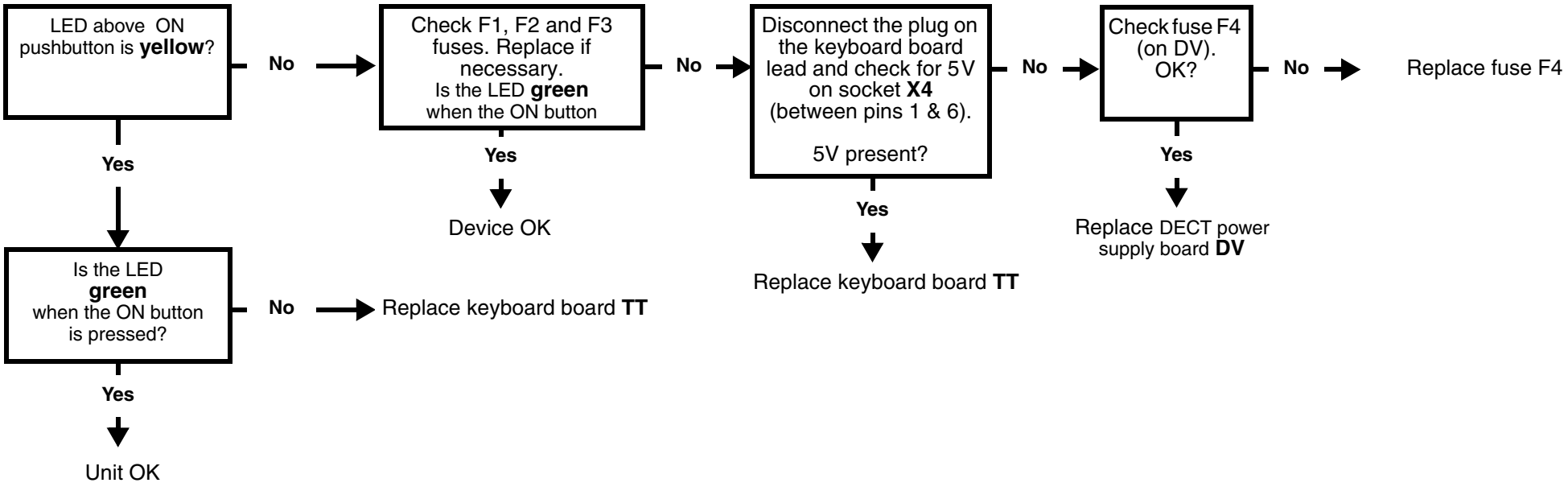

4.1 System cannot be switched ON

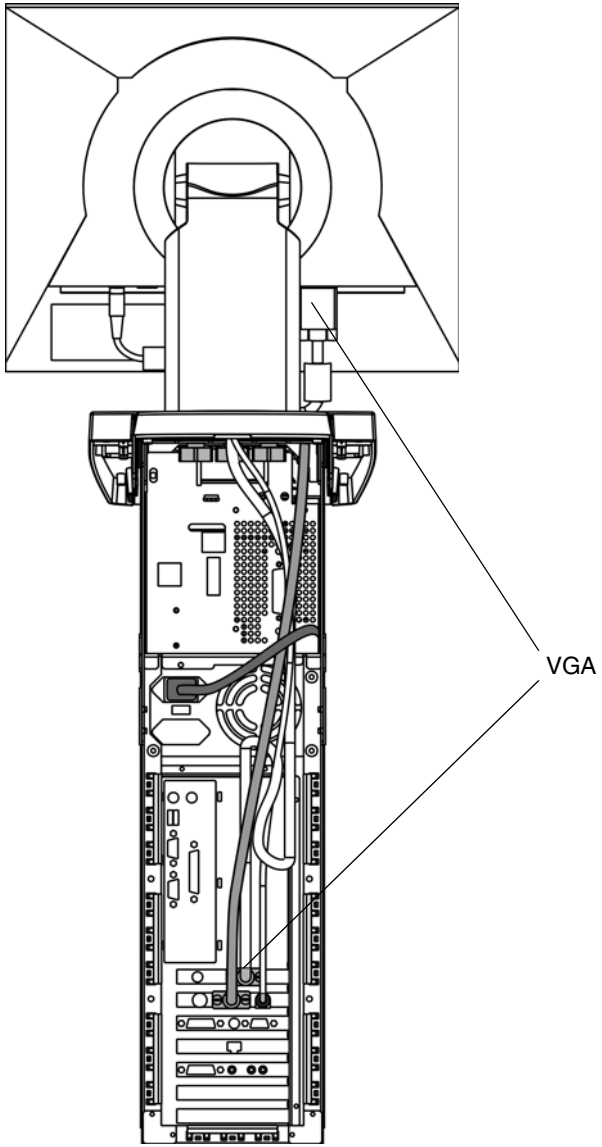
VGA

- Are the keyboard, trackball and VGA cable connected to the monitor on the PC drawer?
- Is there a disk in the disk drive? If there is, remove it.
- Is the LED above the ON button **yellow** or **green**? – ☝ see page 4 - 7

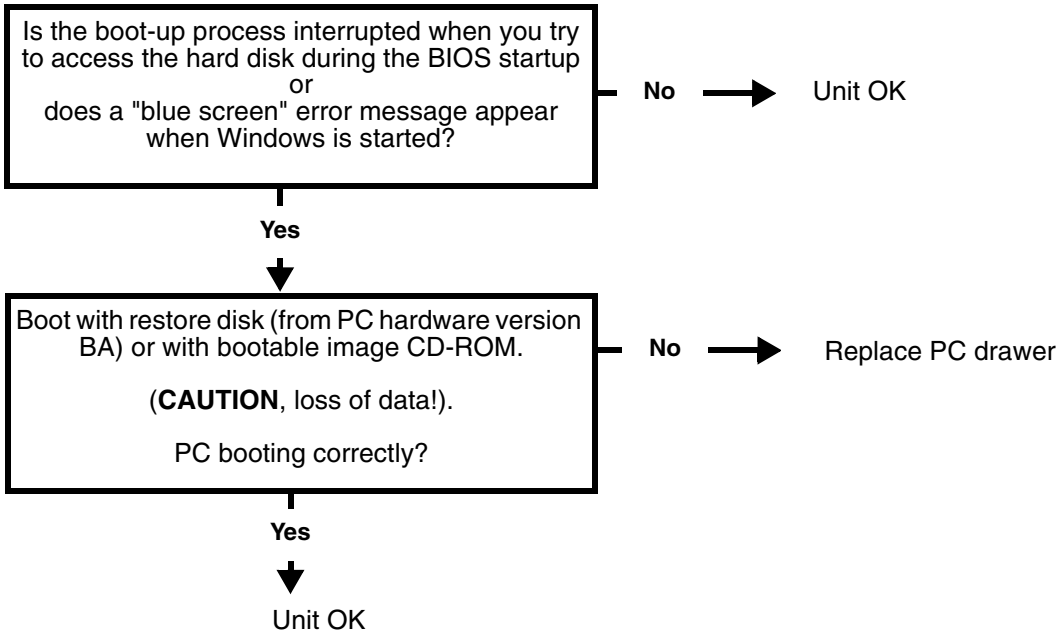

4.2 PC not booting properly I

Table 1:
List of beep-tone error codes

Beep tone sequence	Cause of error
1x short	OK beep following graphics card test. If **no image** is visible yet, check the following points: Is the monitor switched on and the control LED illuminated? If not: Check the monitor voltage supply. If the **red control LED** is illuminated, check the VGA cable connecting the graphics card to the monitor. If the **green control LED** is illuminated (monitor detects an input signal), check the brightness and contrast settings of the monitor.
1x long and 3x short	The graphics card is defective or not correctly plugged in to the motherboard.
Repeatedly long	The memory module on the motherboard is defective or not correctly plugged in.

Table 2:
Error messages during boot-up and possible causes of errors:

Error message	Cause of error
Floppy disk(s) fail (40):	Voltage supply or data cable to floppy not correctly plugged in or defective. If the cable is OK, the floppy disk drive may be defective.
Disk Boot Failure, insert System Disk and press Enter:	If the primary master disk was not found: Check the data cable and voltage supply of the hard disk and the CD/DVD drive.
Press a key to reboot:	Boot sector of hard disk can not be found. Boot with restore disk (from PC HW version BA) or with bootable image CD-ROM. If this fails, replace the PC.

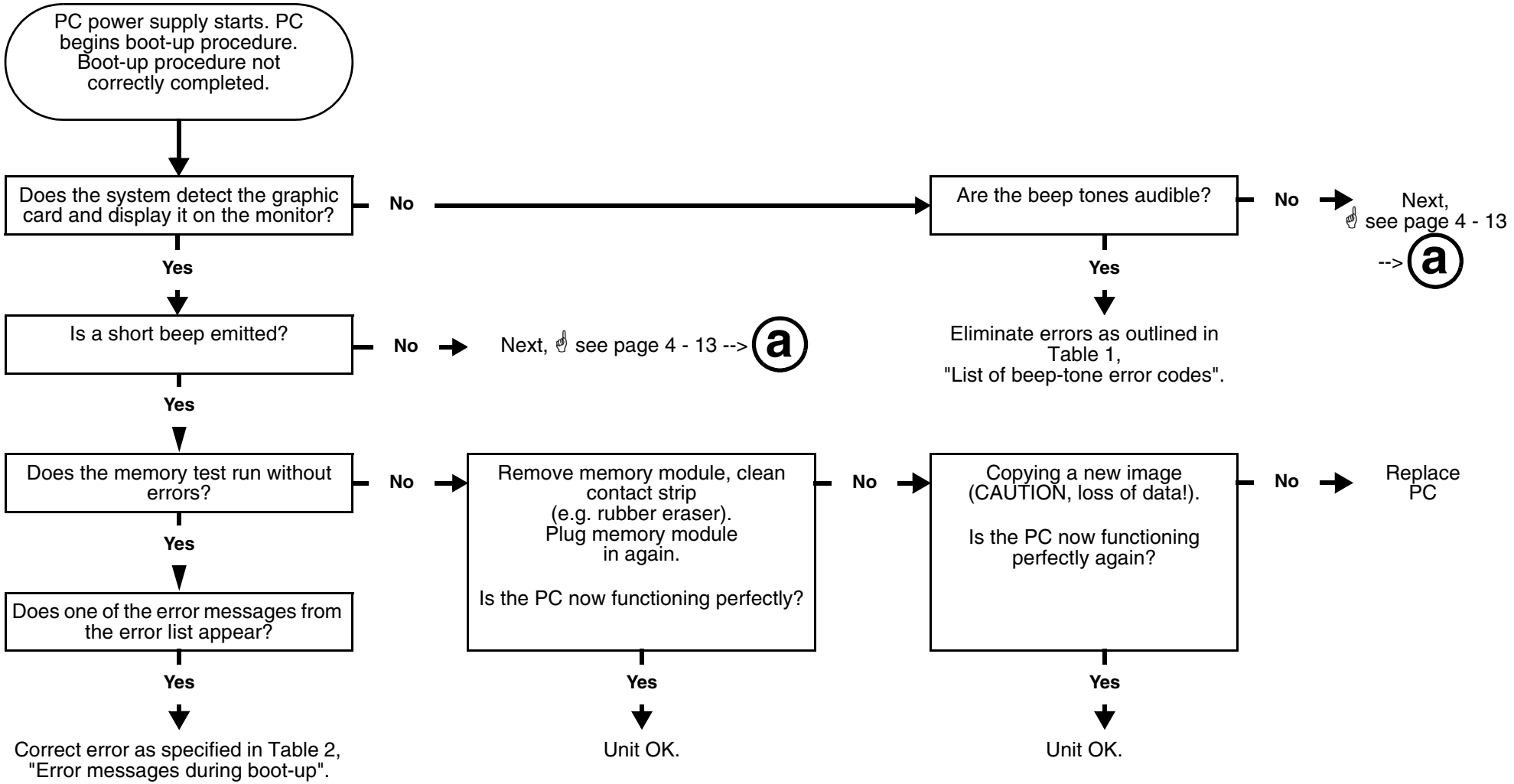

4.3 PC not booting properly II

4.4 PC does not respond during switch-on, PC power supply does not start

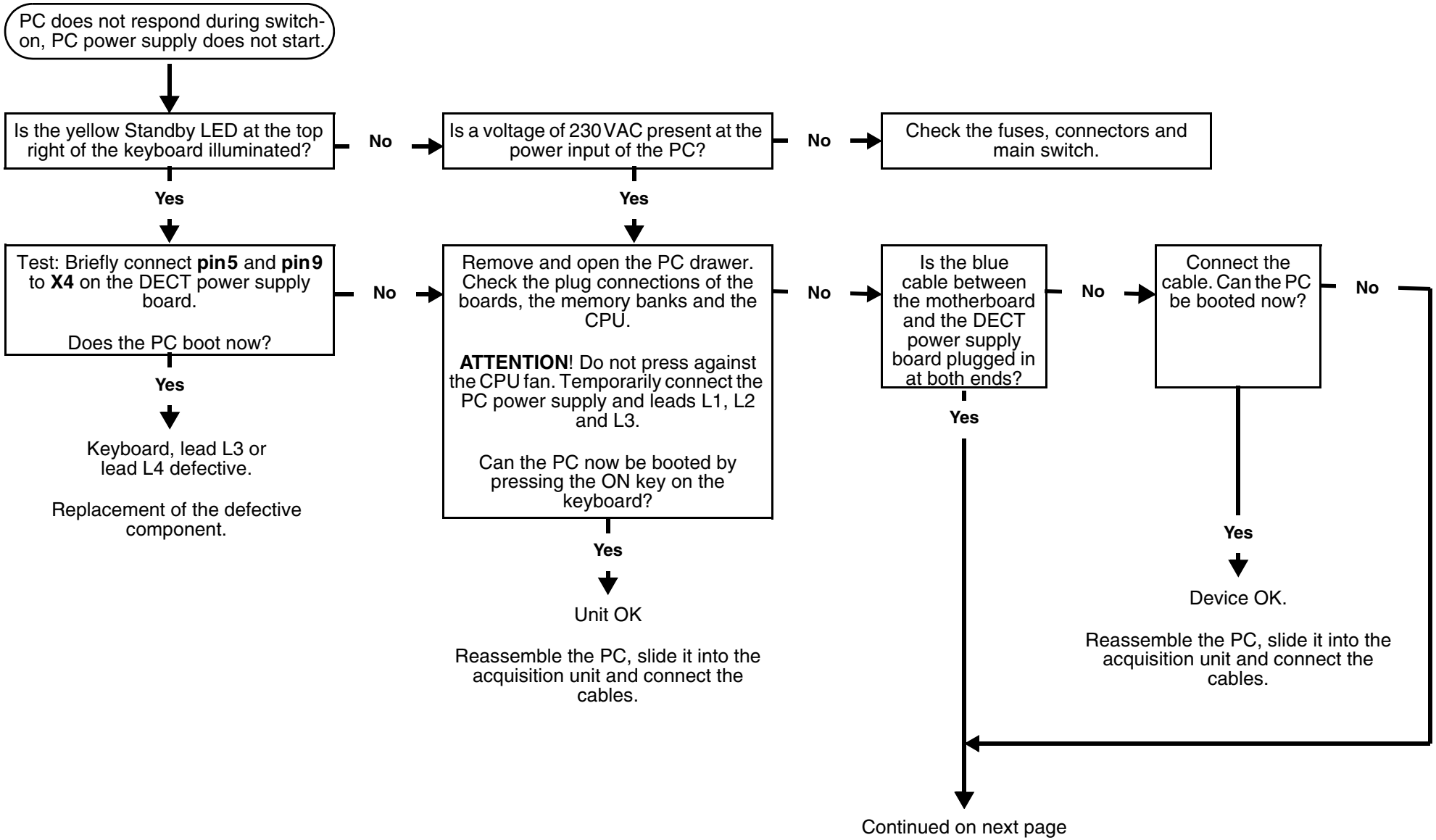

CAUTION: Switch OFF the unit before connecting a measuring instrument or replacing parts!

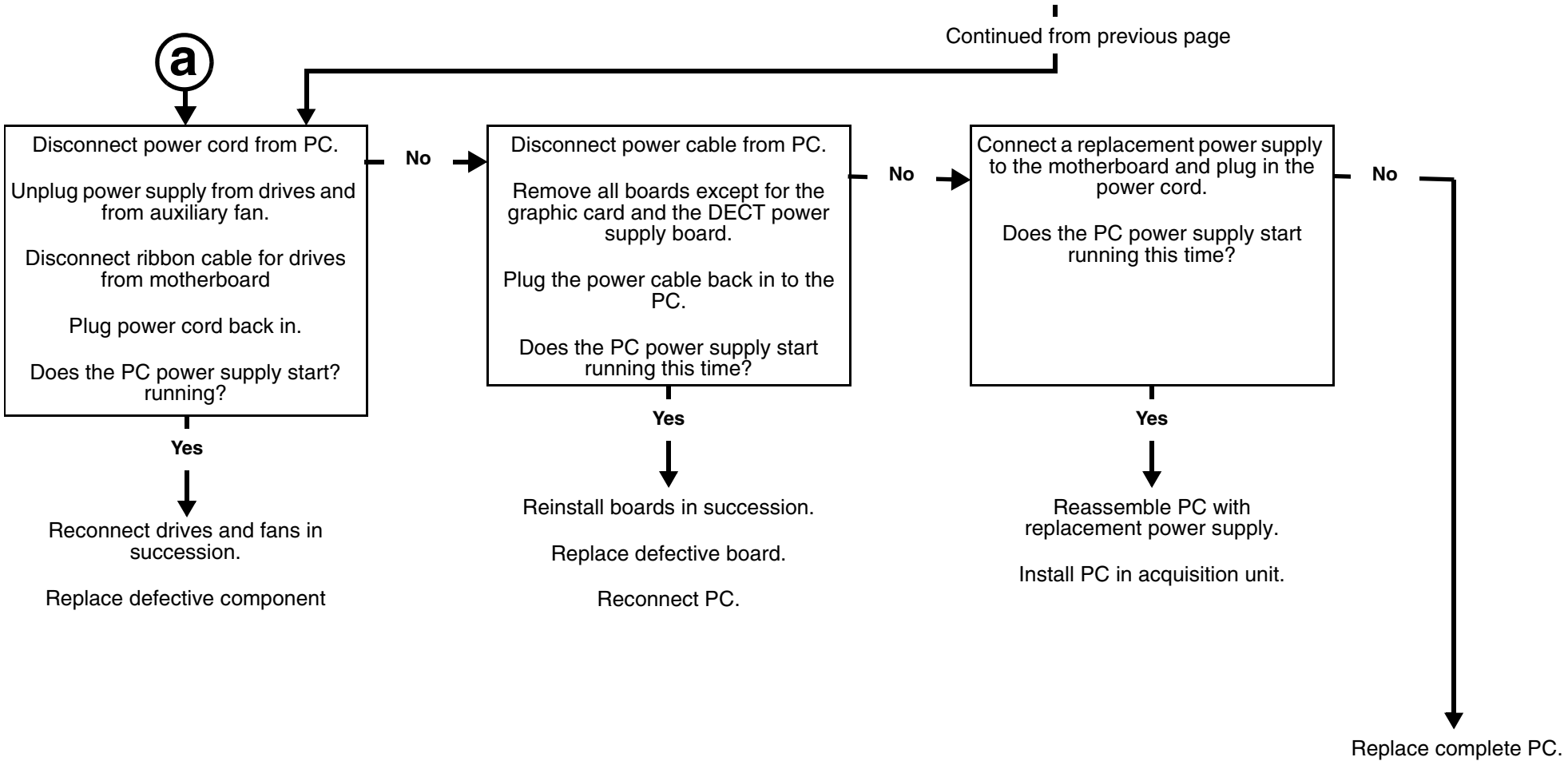

4.4 PC does not respond when switched on, PC power supply does not start

4.5 Further PC faults

Case of defect/fault	How to detect / measure to take
COM port not functioning	Try replacing the radio interface with a cable connection. If this fails, check whether the COM port is enabled in the BIOS. If it is, replace the PC.
No mouse pointer displayed on screen	Trackball defective or not connected.
No keyboard input possible	Keyboard (keyboard controller) defective or improperly connected. Check to make sure this fault is not due to bent plug contacts.
Network can not be accessed	LED "10" or LED "100" on the slot plate of the network card must always be illuminated green. If not: • The network cable between the network card and the hub / switch is defective. • Hub / switch defective (check whether other PCs connected to hub / switch can access the network). • Network card defective The "TX Data Act" LED flashes during data communication via the network.
CD-ROM / DVD-ROM missing in list of system drives (Explorer)	Data cable and/or voltage supply disconnected and/or defective. If this is not the case, the drive is defective. Test via BIOS: It must be possible to select the drive.
No audio playback	Only a musical CD or only a wave file can not be played back: • Check the software settings. • Wrong sound card driver installed. • Cable between CD-ROM / DVD-ROM drive and sound card loose or defective. • Sound card defective. • CD-ROM / DVD-ROM drive defective.
No audio playback at all:	No audio playback at all: Test: Connect loudspeaker directly to sound card without the amplifiers on the DECT power supply board. If an audio playback occurs then, check the cables to and from the DECT power supply board. Then replace these cables or the DECT power supply board if necessary. If the sound playback functions without the DECT power supply board: Then the loudspeakers (including the lead) or the sound card are/is defective, or there is an error in the software setting, or the wrong driver was installed for the sound card.
Warning on monitor indicating that fan RPM is too low	Check whether the fan brushes against an obstruction. If not, replace the fan. If replacement of the fan does not eliminate fault, replace thePC. In this case, there is probably a defect on the motherboard.

If the image on the monitor flickers, a distinction must be made between two causes:

a) Flickering of the image brightness and

b) Flickering of the image due to incorrectly set monitor parameters

Adjustment of monitor parameters (all types except PV751)

- Select the mode ⇨Start ⇨Exit in Windows.
- Press the **SELECT/AUTO** monitor button twice in succession while in this mode.

The monitor then automatically sets the adjustment parameters.

- Then exit the **"Quit Windows"** window with **"Cancel"**.

The monitor is now correctly adjusted.

For **type PV751** monitors only (see name plate on rear side of monitor):

- Set image brightness to **maximum value of 130**
- Set contrast to **maximum value of 140**

If the monitor still flickers following both of these checks, you must then replace

- the monitor (if monitor type PV751 is not involved) and/or
- the assembly "power supply, complete" REF 58 09 889, Rep 58 65 550 (see Chapter ‘6.1.5 Complete power supply unit”).

4.6 Monitor image flickering

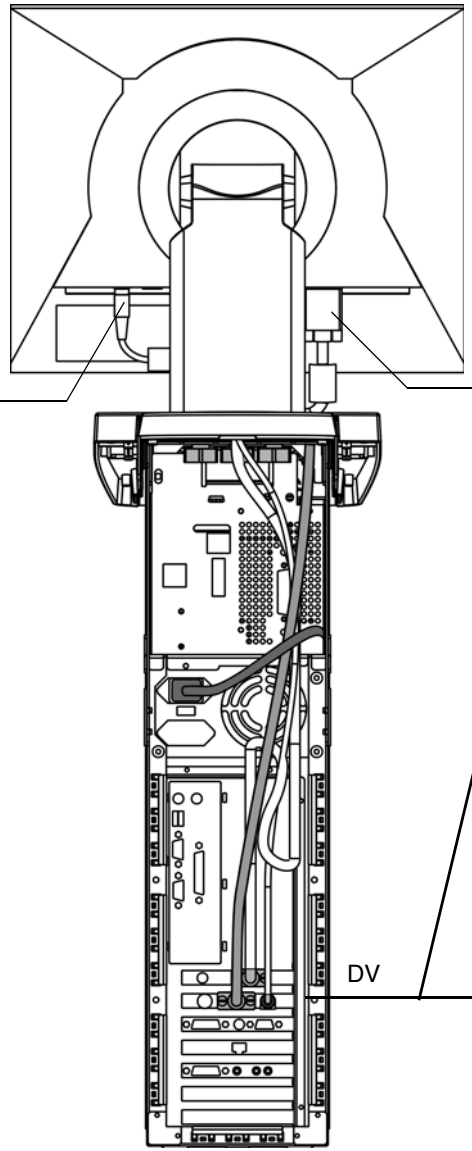
Voltage supply
Monitor
VGA
DV

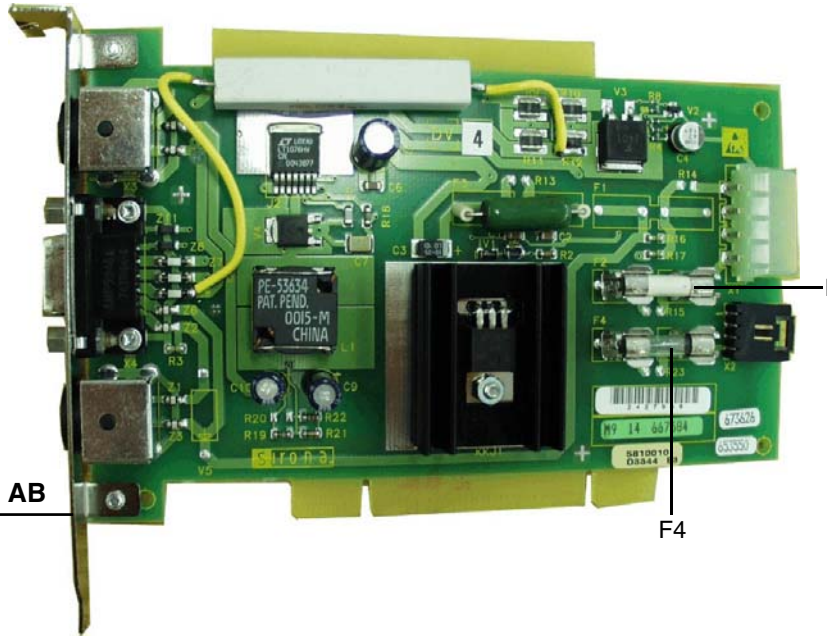
up to HW Version AB
F2
F4

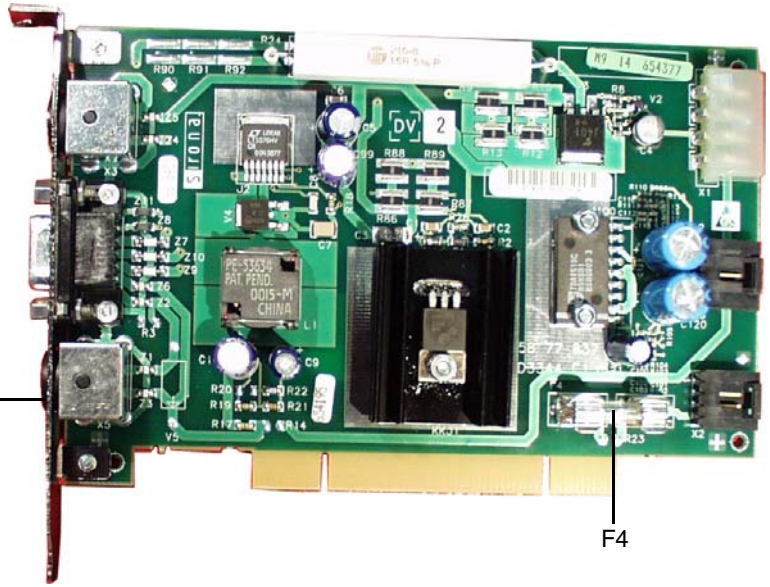
from HW Version AC
F4

- Are the power supply and the VGA cable connected to the monitor?
- Is the monitor switched on (LED to the right of the ON switch is red or green)?
- Is the PC switched on (LED above the ON button is green)?
- Switch off the monitor and switch it on again after a few moments.

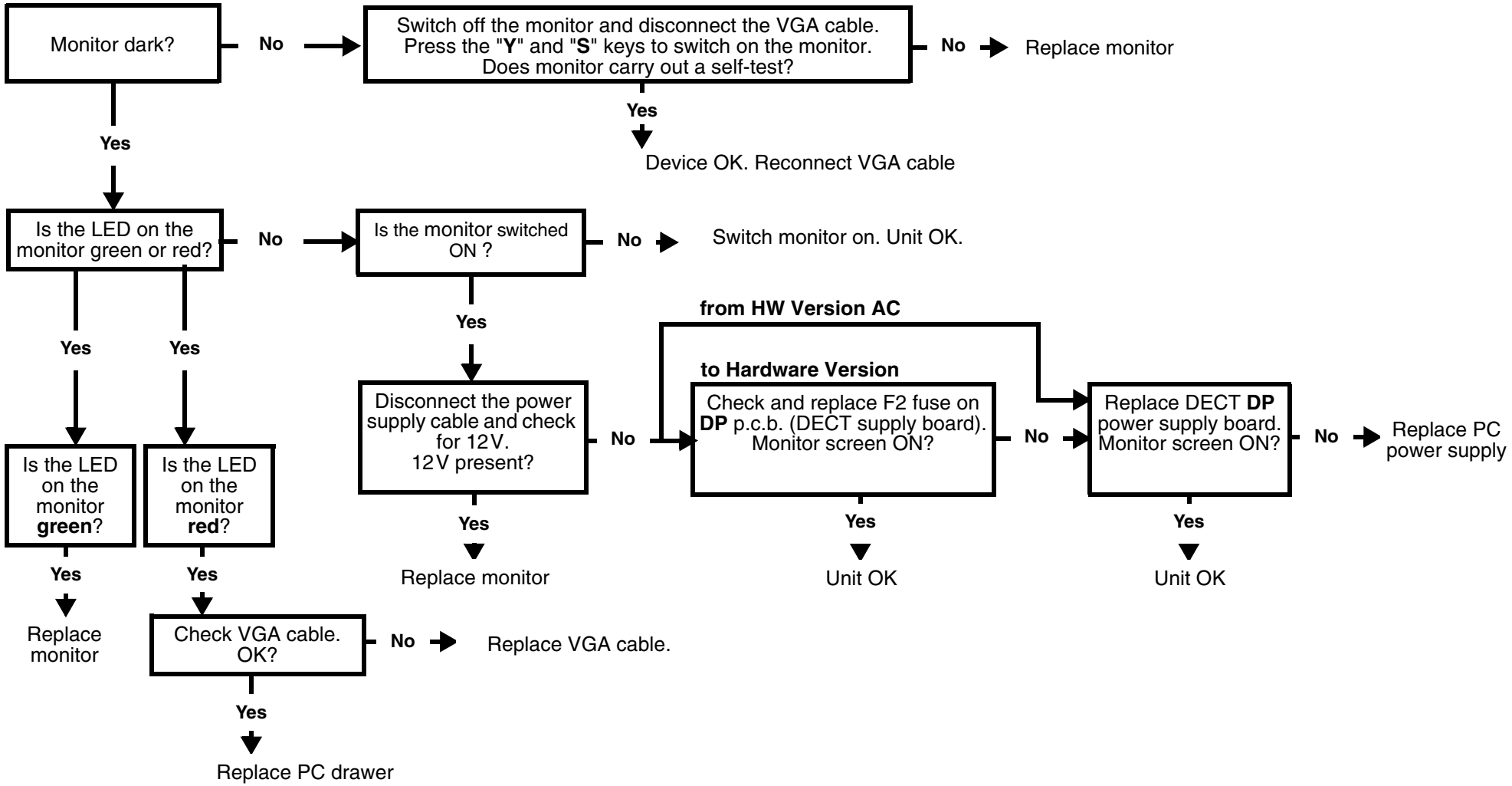

4.7 No monitor display

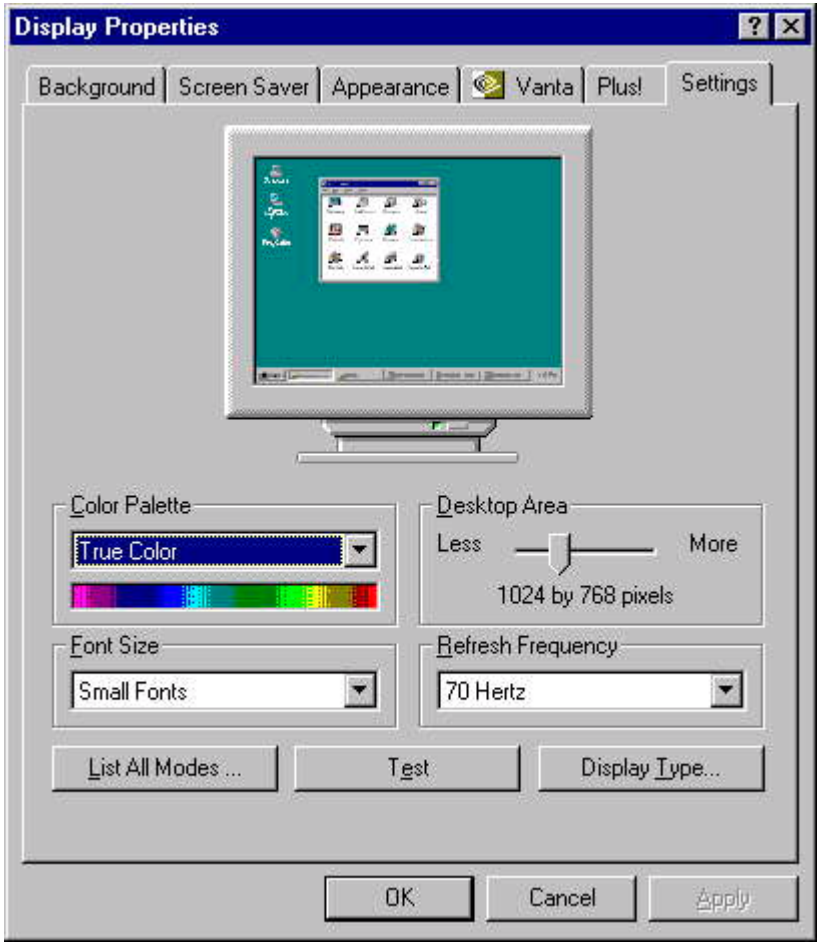
Display Properties
Background
Screen Saver
Appearance
Vanta
Plus!
Settings
Color Palette
True Color
Desktop Area
Less
More
1024 by 768 pixels
Font Size
Small Fonts
Refresh Frequency
70 Hertz
List All Modes ...
Test
Display Type...
OK
Cancel
Apply

- In Windows, select ***START -> SETTINGS-> CONTROL PANEL> DISPLAY-> SETTINGS*** to check that the resolution is **not** set to above 1024X768 (VESA XGA) and that the refresh rate is set to between 56Hz and 75Hz.
- When the resolution is set to exactly 1024x768 (VESA XGA), press the SELECT/AUTO button twice to automatically adjust the monitor to the correct setting.
  If this does not happen, replace the monitor.
- When using screen resolutions lower than 1024x768 (VESA XGA): Press the MENU button.
  Then press the SELECT/AUTO key **once.** Select ▶ for Full screen mode.
  If this is not possible, replace the monitor.

4.8 Incorrect monitor display format size

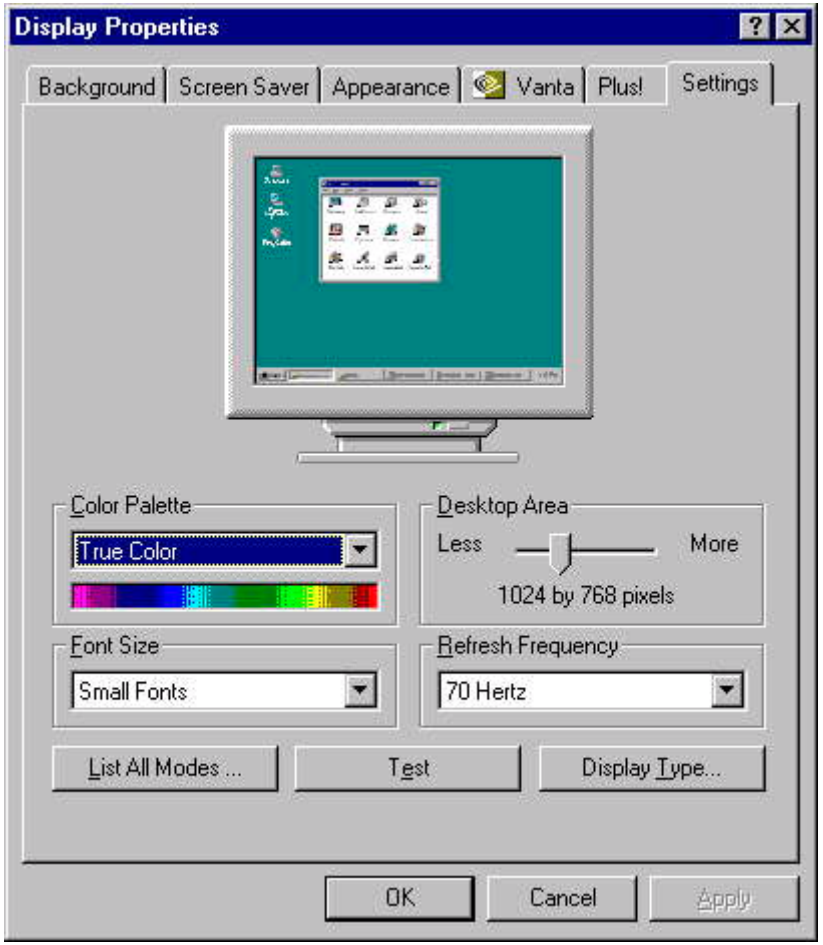

Brightness

Contrast

- Check Windows color pallet setting in the ***Start -> Settings -> Control -> Display -> settings***.
  In the color pallet, a setting between 16Bit (High Color = 65536 colors) and 24Bit (True Color = 16777216 colors) must be selected (only applies to 3dfx Voodoo3 graphics card). If other graphics cards are used, the color pallet setting must be > 16Bit.
- Adjust the monitor brightness to 140 and the contrast to 130.

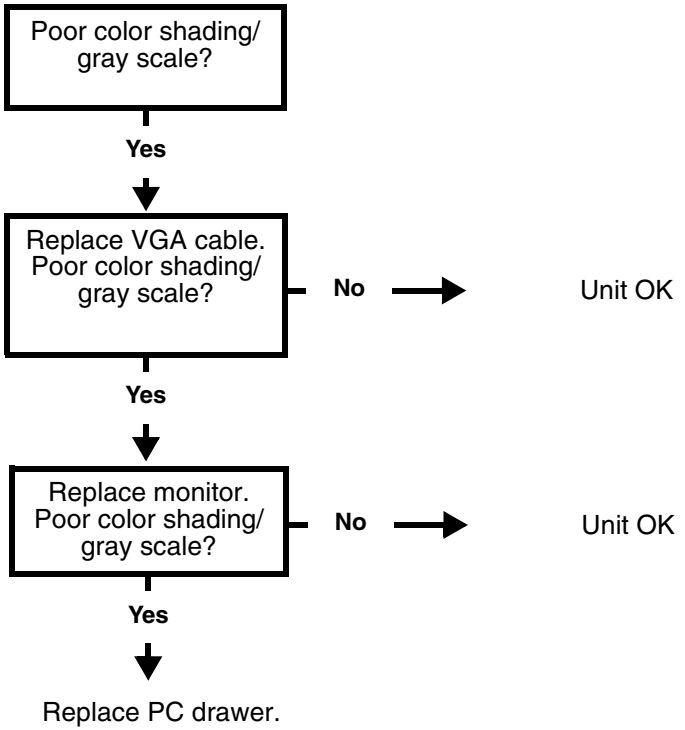

4.9 Monitor: Color shade/gray scale is too weak

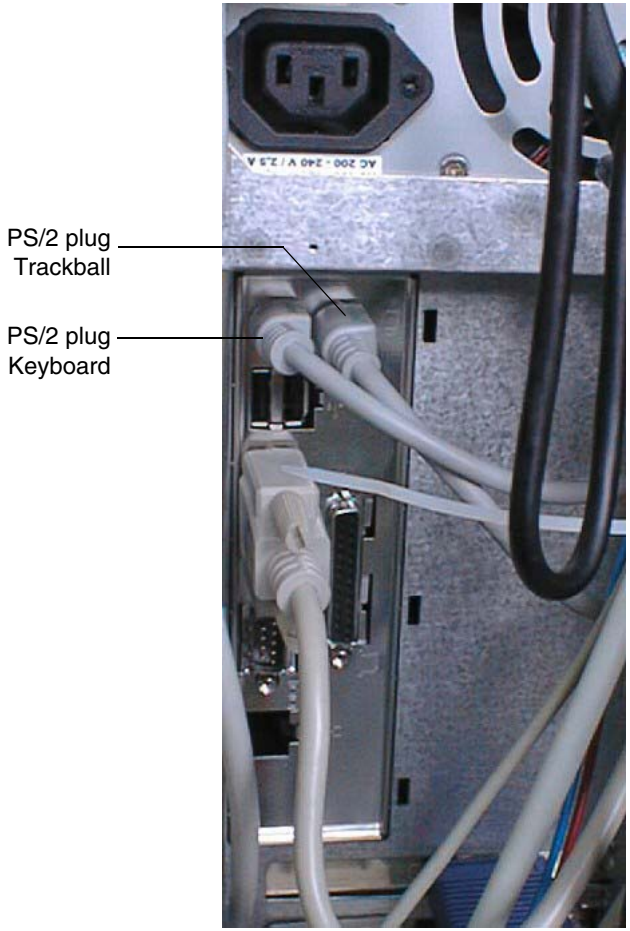
PS/2 plug
Trackball
PS/2 plug
Keyboard

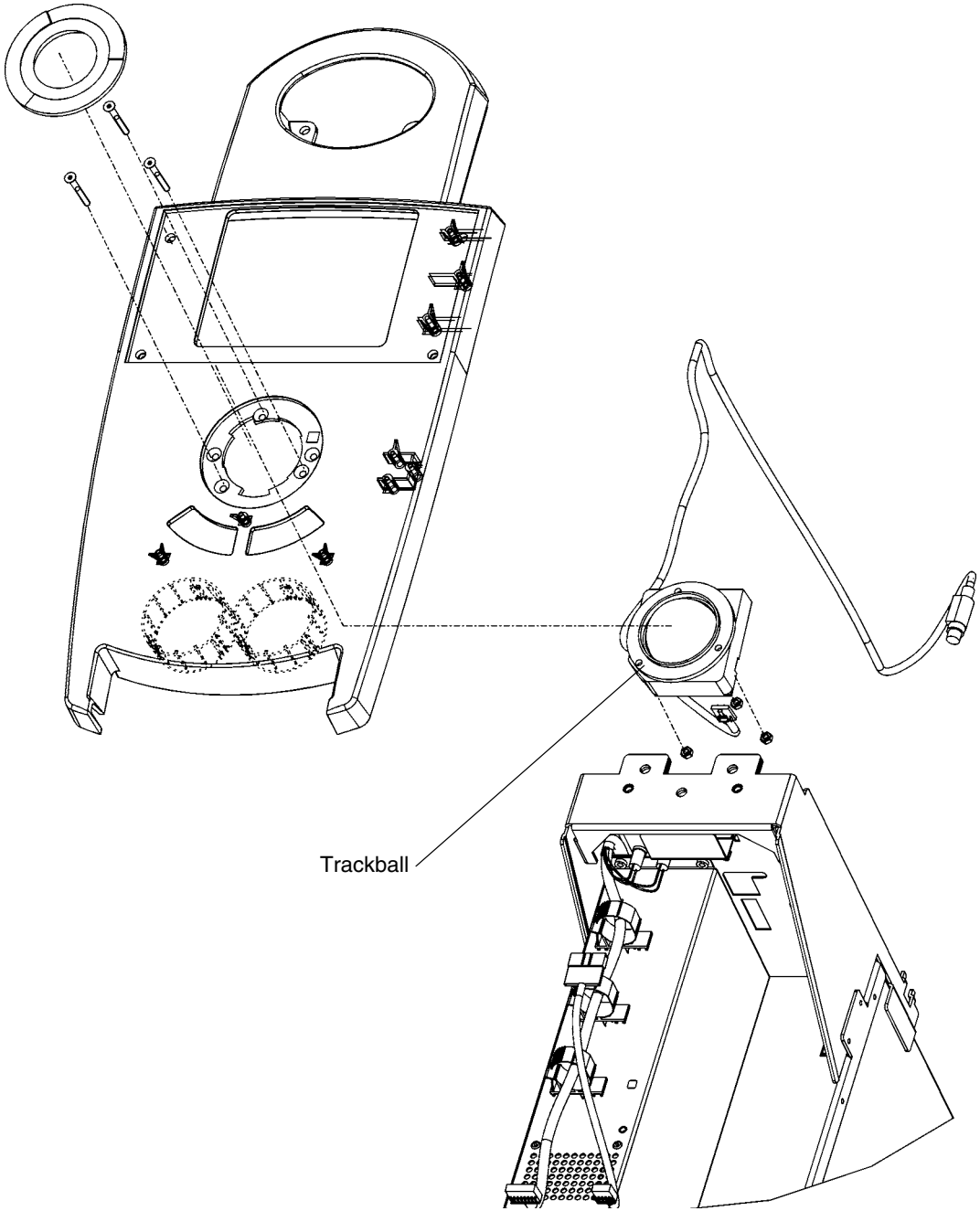
Trackball

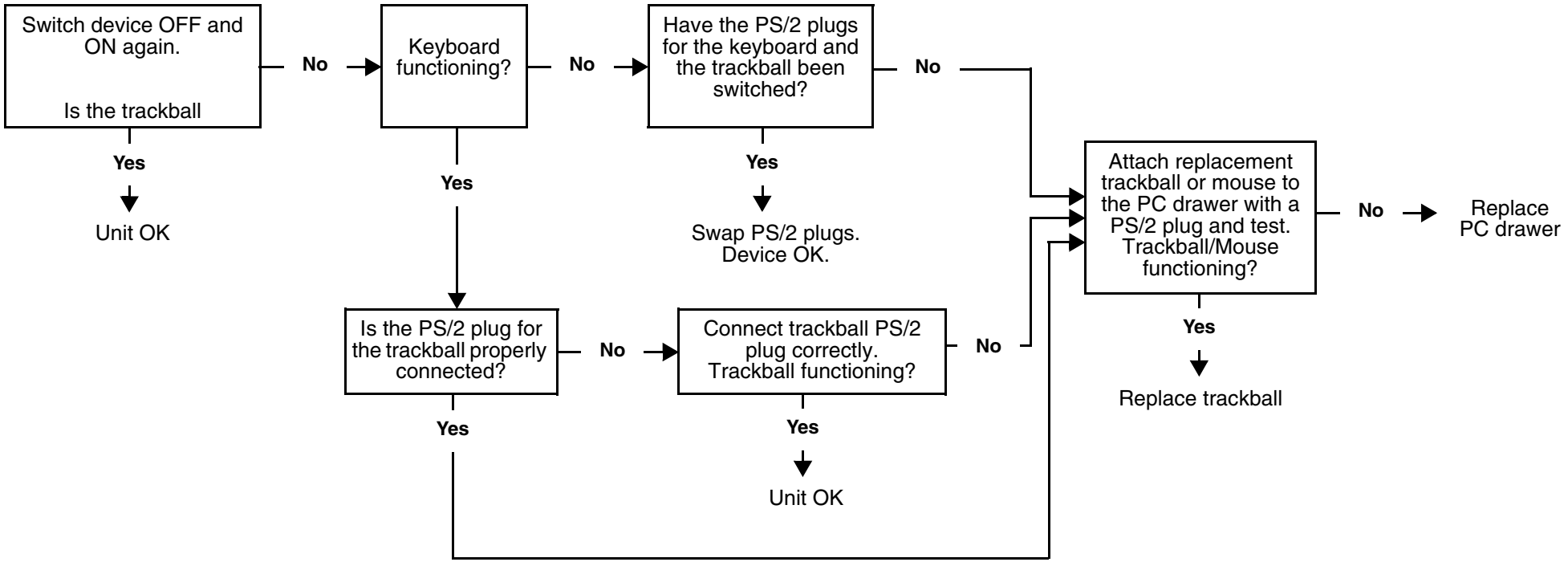

4.10 Trackball not functioning

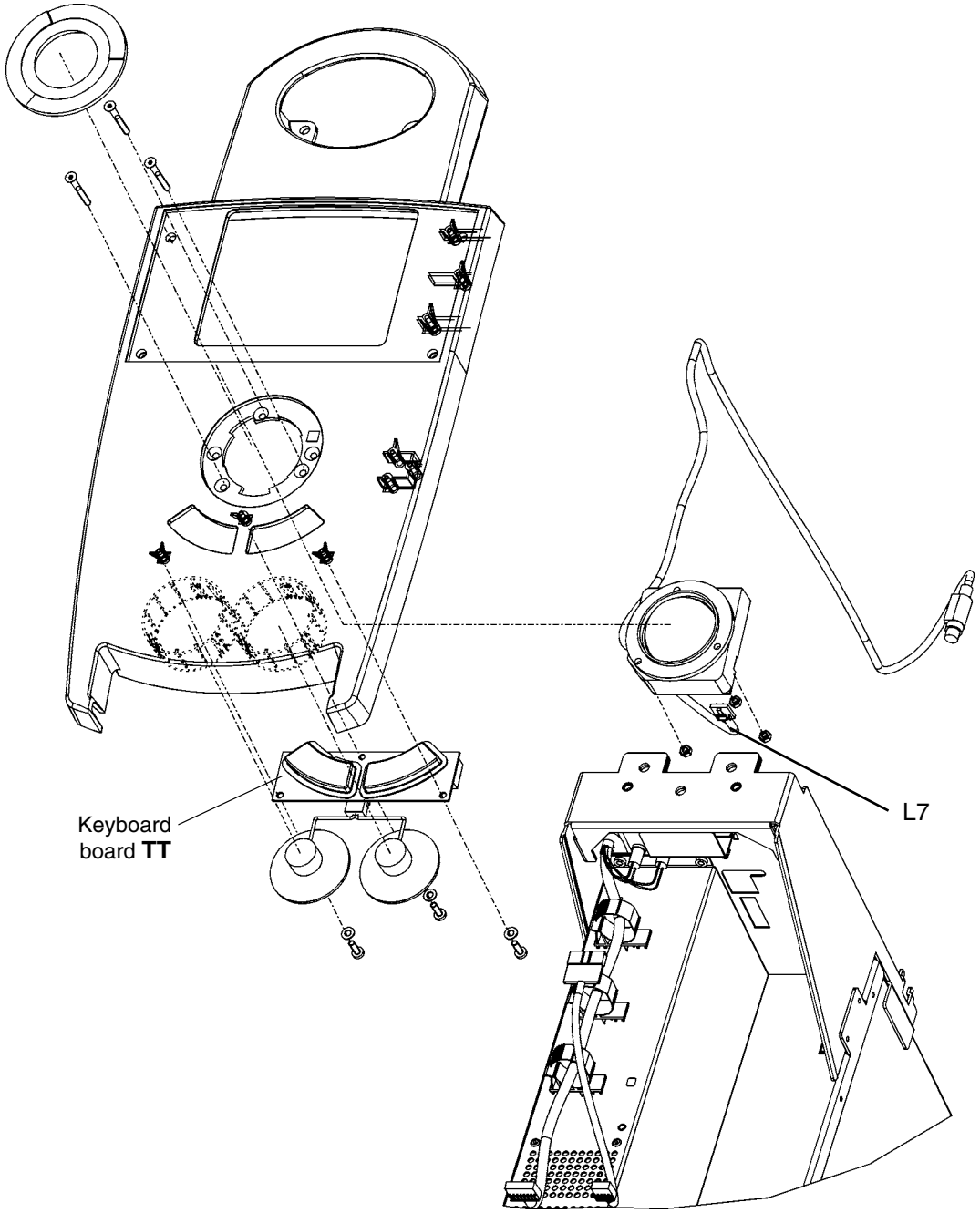
Keyboard
board **TT**
L7

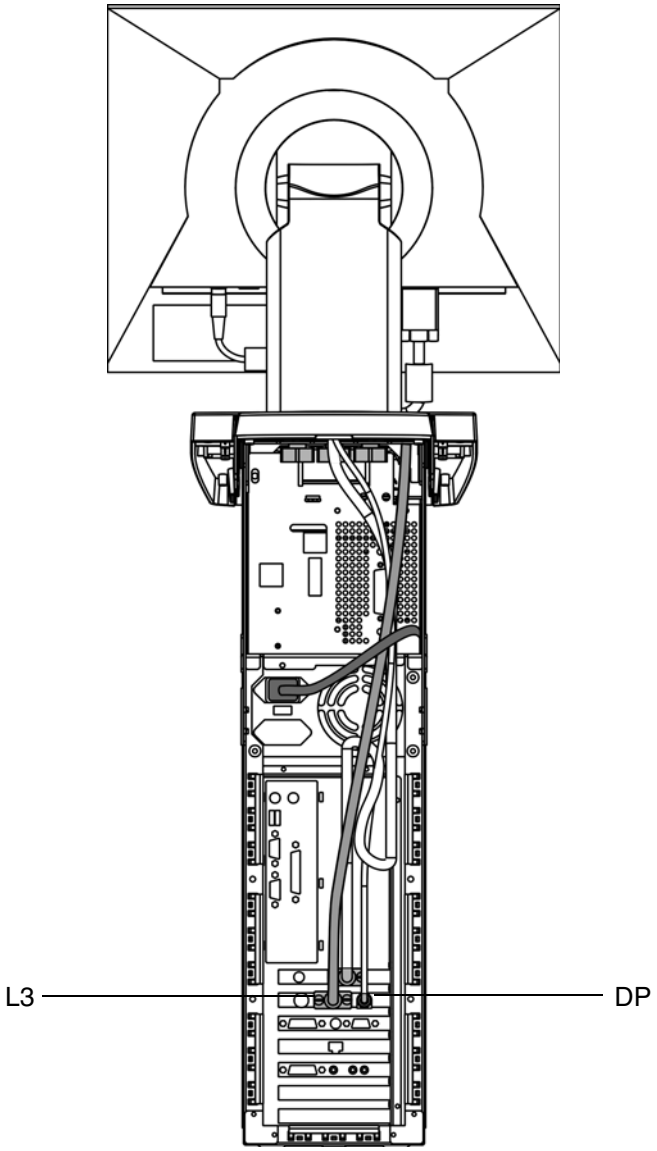
L3
DP

- Check whether trackball is functioning
- Disconnect the pedal and reboot the PC.
- Check continuity of keyboard board lead **L3** (between DECT supply board **DP** and keyboard board **TT**).
- Check trackball power supply.

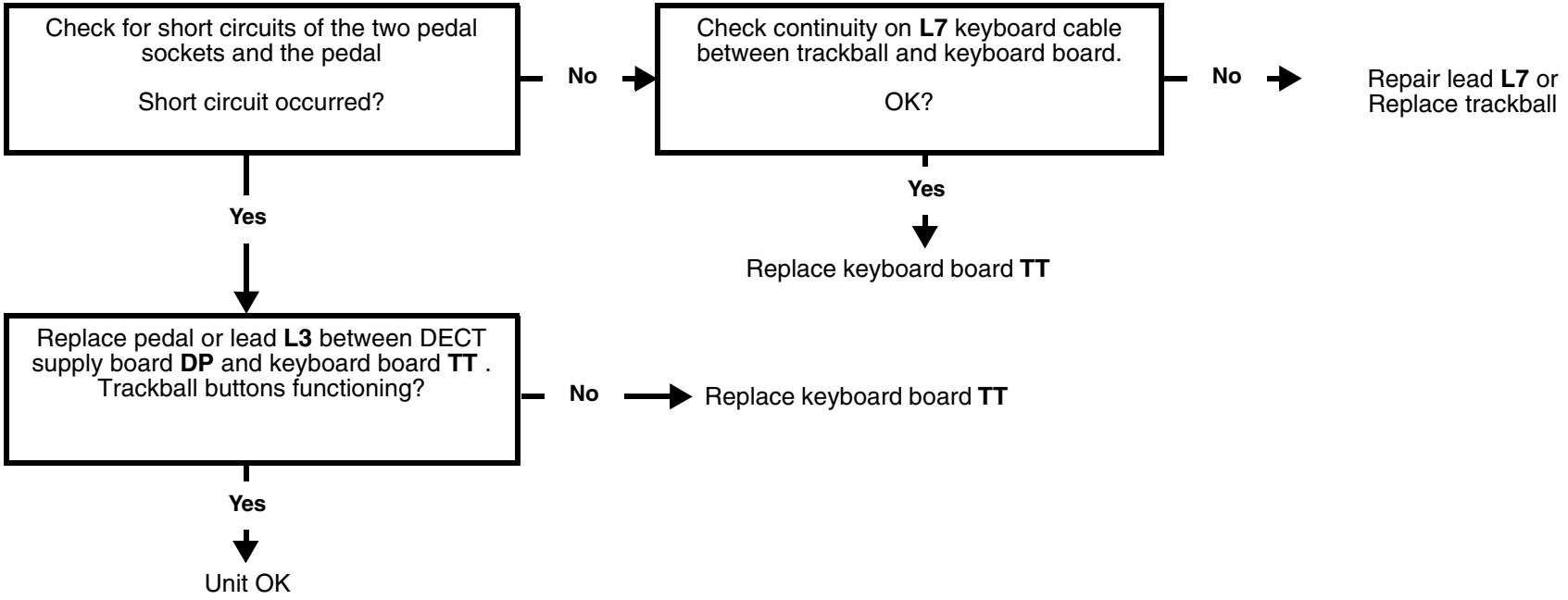

4.11 Trackball buttons not functioning

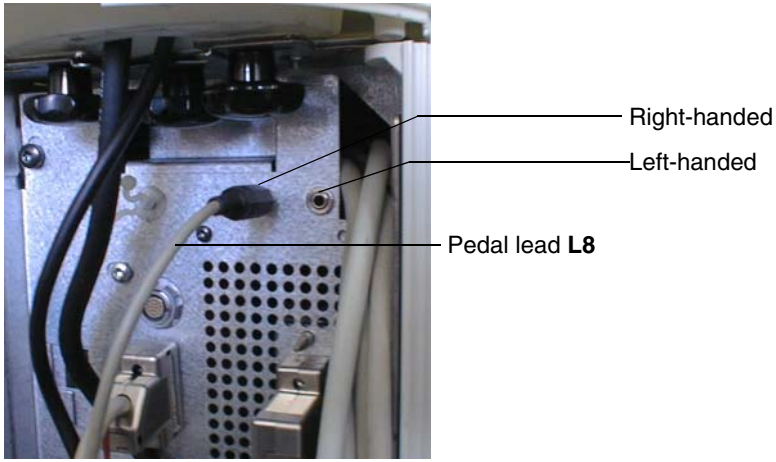
Right-handed
Left-handed
Pedal lead **L8**

- Refer to "Changing from Right-Handed to Left-Handed Operation" in the Operating Instructions for the Acquisition Unit.
  Software changeover via ***Start -> Settings -> Control -> Mouse***.
- Is the plug of pedal lead **L8** connected properly?
- Is the pedal not mechanically obstructed?

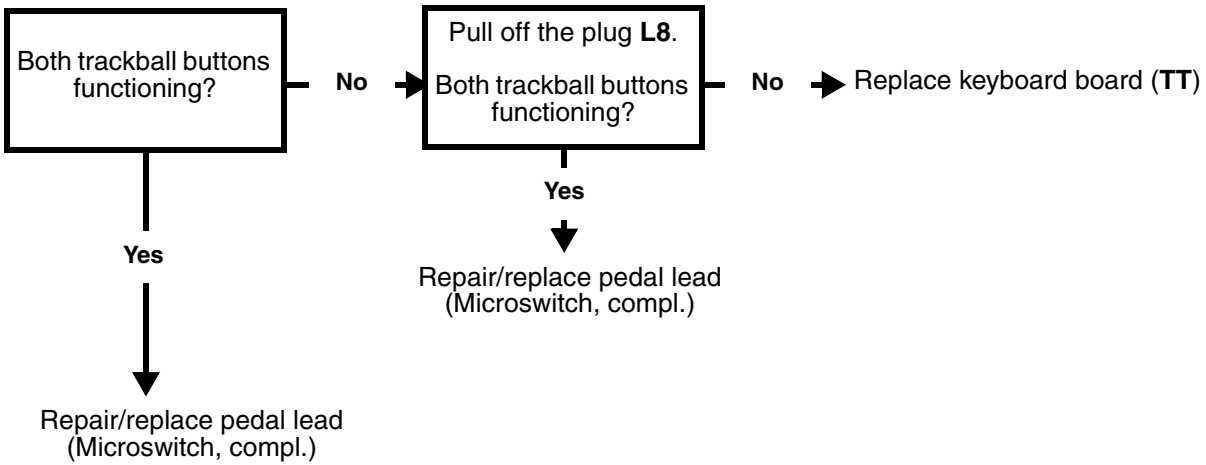

4.12 Pedal not functioning

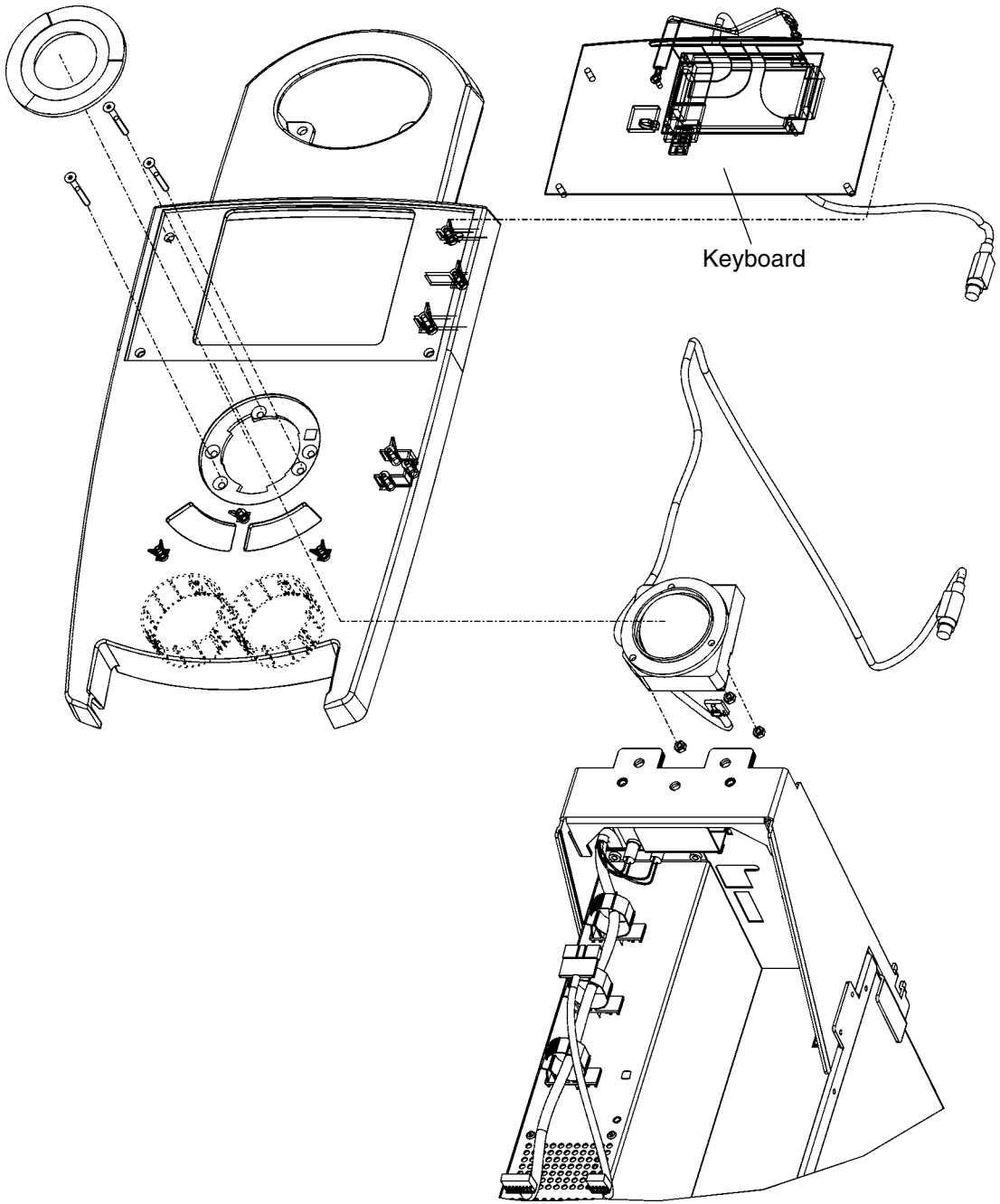
Keyboard

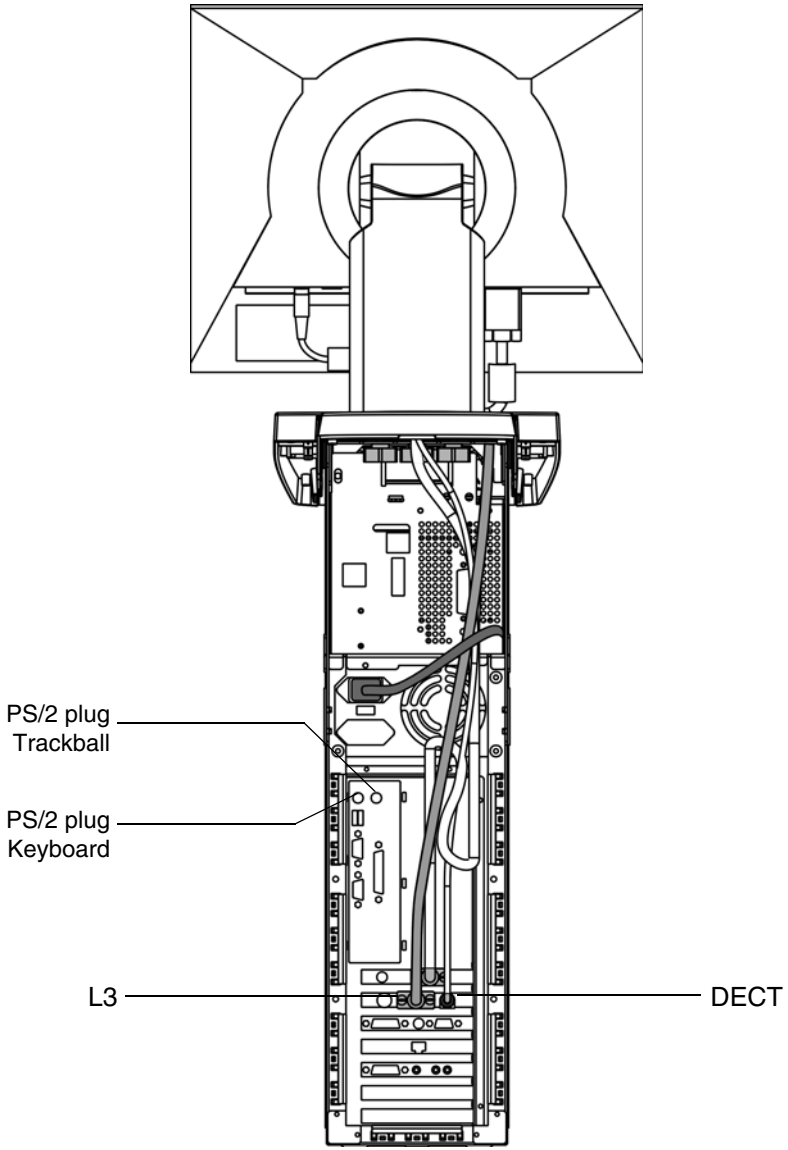
PS/2 plug
Trackball
PS/2 plug
Keyboard
L3
DECT

- Check whether the trackball and keyboard PS/2 plugs are properly connected to the PC drawer and not in the wrong sockets (switched).
- Check continuity on L3 cable to the keyboard board.

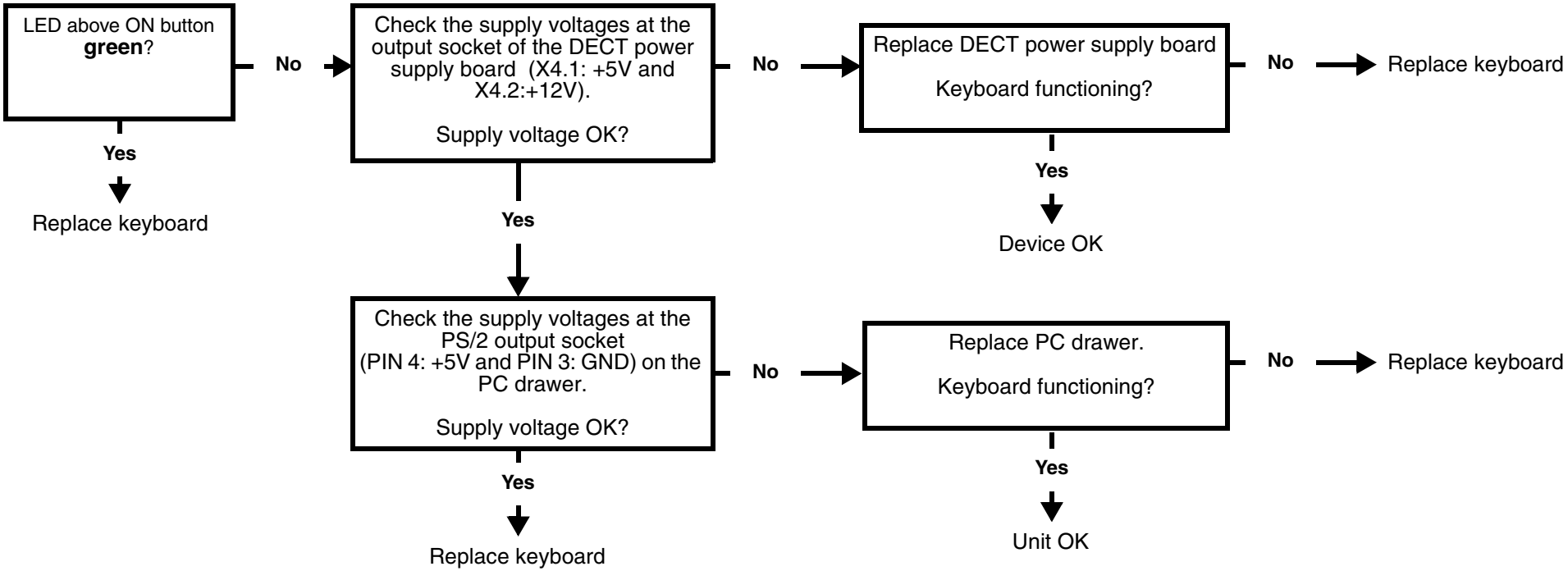

4.13 Keyboard not functioning /defective

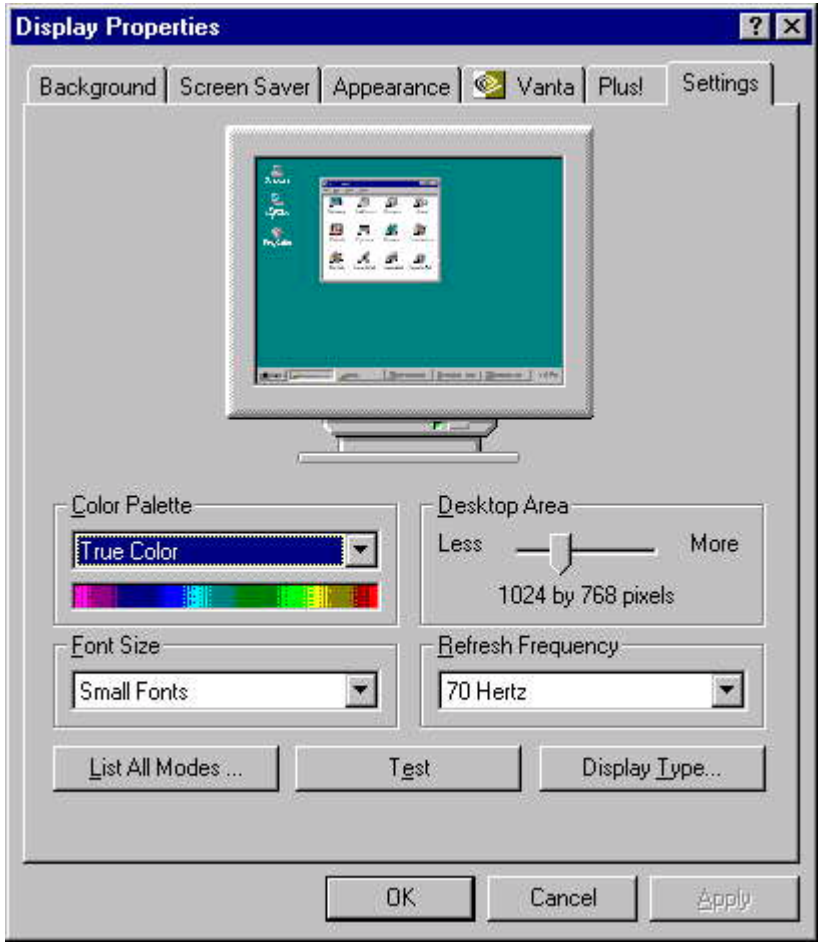
Display Properties
Background
Screen Saver
Appearance
Vanta
Plus!
Settings
Color Palette
True Color
Desktop Area
Less
More
1024 by 768 pixels
Font Size
Small Fonts
Refresh Frequency
70 Hertz
List All Modes ...
Test
Display Type...
OK
Cancel
Apply

1. Is the camera cable properly connected to the camera and the image acquisition (Frame Grabber) card in the PC drawer?
2. **For versions up to IDS 2001 only:**
   Recorded image displayed without camera live image?
   If YES, check Windows color pallet setting via ***Start -> Settings -> Control -> Display -> Settings***. In the color pallet, a setting between 16Bit (High Color = 65536 colors) and 24Bit (True Color = 16777216 colors) must be selected. Change the setting if necessary. It is permissible to select 32Bit on Pentium® III systems.
3. **Only for versions up to IDS 2001:**
   If there is still no live image, check whether the screensaver was activated.
   If the answer is YES, select ***Settings -> Control -> Display -> Screensaver*** (**None**). Then accept this setting and reboot the PC if necessary.
4. Carry out camera quick test (☝ see page 2 - 20).
5. Connect replacement camera cable.
   If this fails, connect a replacement camera.
   If this also fails, install new software.
   If there is still no camera image, the image acquisition (Frame Grabber) card in the PC drawer is probably defective. Replace the Frame Grabber card.
6. CEREC fault message appears when the camera should be activated? YES: install new software.
   If no camera image appears, replace the Frame Grabber card.

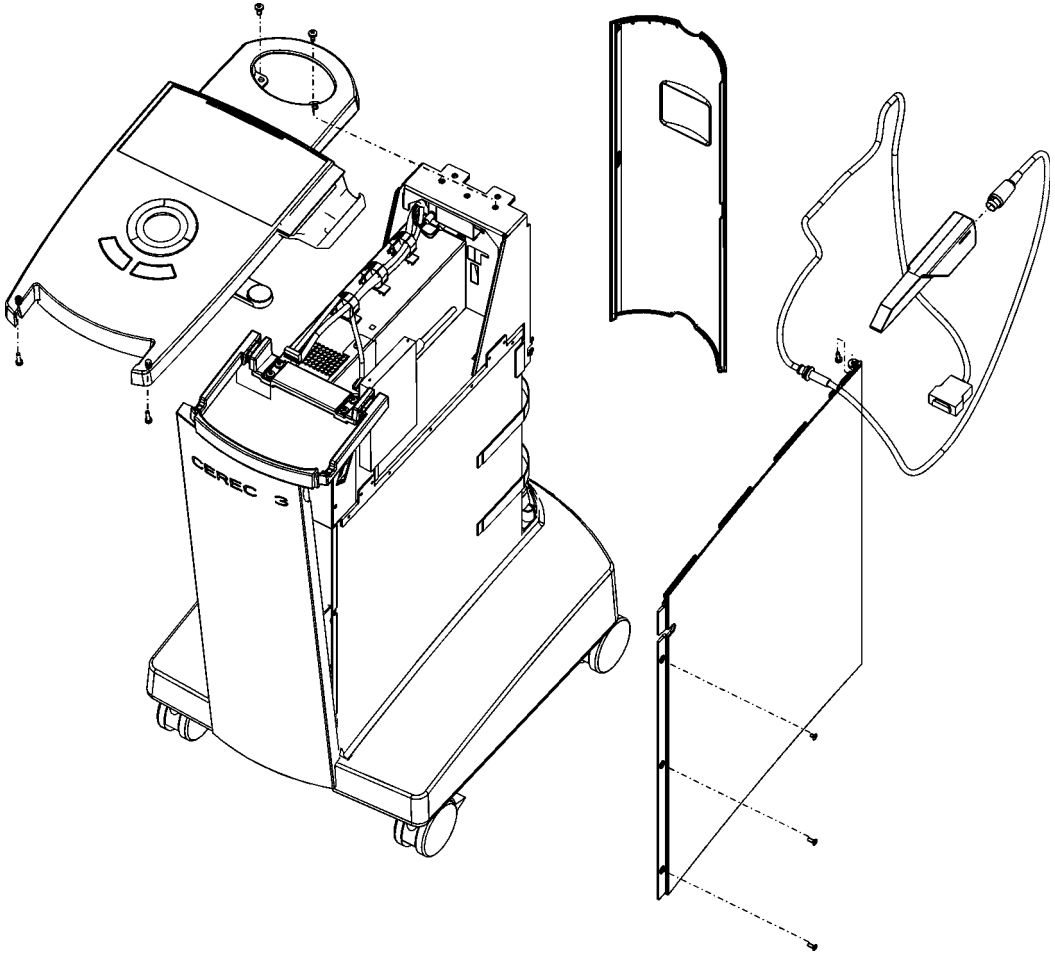
CEREC 3

- Check whether the lifting magnet in the 3D camera is briefly activated during the measuring phase. A clicking sound should be heard.

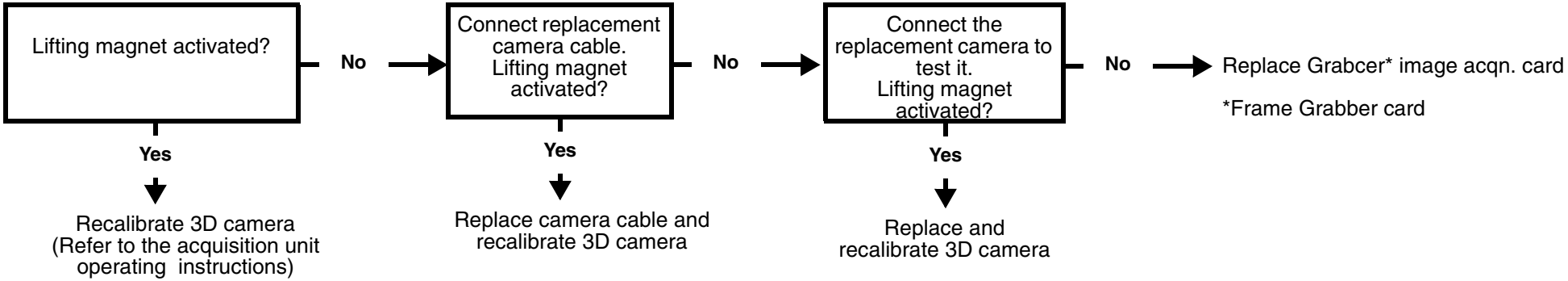

- Badly adjusted optical impressions may be due to shaking of the camera. The stored optical impression may, however, be OK despite shaking of the camera.

4.15 Incorrect measuring sensor setting

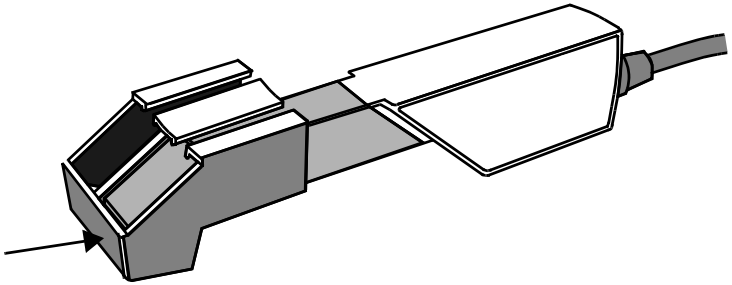

There are two types of error messages which can occur during camera calibration:

– Type 1 are warnings which should be treated seriously. It is possible to temporarily accept these errors by selecting OK and then continue with the calibration process.

– Type 2 are errors which force the calibration process to stop without the calibration data being saved.

The texts of the error messages give instructions on what to do. Observe the following:

- Prepare the calibration set properly.
- Slide the calibration set up to the stop.
- Ensure that the camera is kept clean (see acquisition unit operating instructions and 3D camera calibration instructions).

If "Image too small.. " is displayed, try to reposition the prism tube in relation to the camera in order to avoid any possible image loss.

If it is not possible to prevent errors from occurring by carrying out the suggested measures, the 3D camera, camera cable or PC drawer may be defective.
First, test the replacement 3D camera. If this does not help, test a replacement camera cable. If this still does not help, test a replacement PC drawer.

The Service program can also be used for diagnosis and documentation purposes.
Select **Settings / Service / Camera quick test** to test the camera and to record the results in a protocol (☝ see page 2 - 20 and ff.).

4.16 Camera calibration: messages

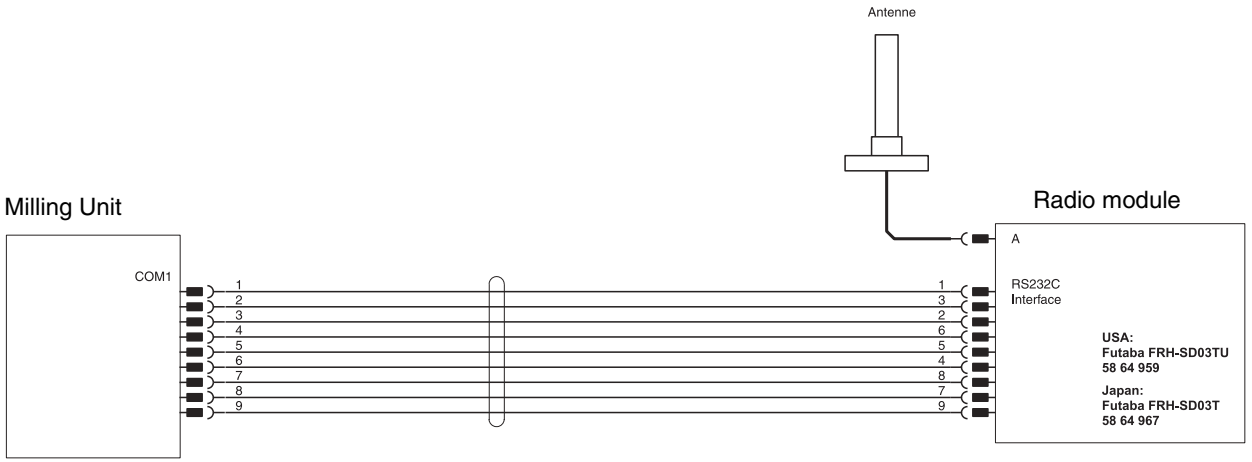
Antenne
Milling Unit
COM1
1
2
3
4
5
6
7
8
9
Radio module
A
RS232C
Interface
1
3
2
6
5
4
8
7
9
USA:
Futaba FRH-SD03TU
58 64 959
Japan:
Futaba FRH-SD03T
58 64 967

- First check the power supplies and cable connections.
- If no LEDs are illuminated, this indicates that there is a problem with the power supply.
- Replace the connection cable to determine whether this is the cause of the problem.
- The serial cable connection on the DECT radio interface basically consists of two null modem cables (There is a 1:1 connection between the pins at either end. Check continuity).
- The serial cable connection on the Futaba radio interface comprises:
  - A null modem cable with two sockets linking the PC to the radio interface.
  - A serial terminal cable linking the radio interface and milling unit (pins 2 & 3, 4 & 6, 7 & 8 at one end are each reverse-linked to the pins at the other end. Check continuity).

It is important to observe the following in serial links:

- The baud rate setting in the Cerec program must always be matched to the transmission channel connected. Always select 19200 baud for the Futaba radio interface. For the DECT radio interface, the configured value (usually 115200 baud) must be selected. Baud rates between 19200 and 115200 can be used for the cable connection between the PC and the milling unit. 115200 baud is normally used. For longer cables (>10m) or when using additional plug connections along the cable route, it may be necessary to reduce the baud rate.
- The milling unit checks the baud rate at which the software was installed. **Should the baud rate be changed, the milling unit must be reinstalled.**
- When the Cerec program is started, it only checks whether a suitable milling unit has been connected to the selected PC serial socket. If a downloaded milling unit is detected, it is then transferred. If this serial socket is being used by a different application (e.g. Sidexis/Videxis or a program which has already started and is running with the milling unit), the milling unit is of course not available.
- If the milling unit is accessed manually from the Cerec program (e. g. when calibrating the scanner, scanning, calibrating the milling unit, milling, changing instruments, carrying out maintenance or servicing) the milling unit software version is checked automatically. If this serial socket is being used by a different application (e.g. Sidexis/Videxis or a program which has already started and is running with the milling unit), the milling unit is of course not available.
- The milling unit status display is only checked at the start of the program and when accessing the milling unit manually. If the milling unit is released by another application (e.g. after completion of milling), the milling unit can be accessed manually again and the status display is updated in the current program. Only individual status displays are changed. Status displays in other applications in current use are not changed!

4.17 Interference at radio interface

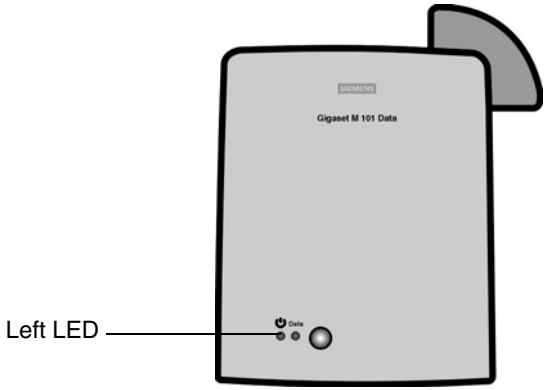
SIEMENS
Gigaset M 101 Data
Data
Left LED

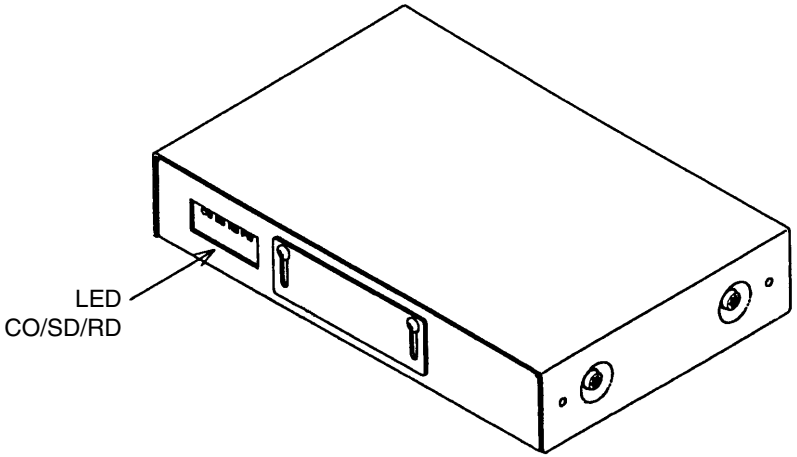
LED
CO/SD/RD

4.17.1 DECT radio interface (EU)

The following problems can occur:

- Radio interfaces are not properly paired or configured. If they are incorrectly paired, the radio interfaces cannot be linked (Left LED flashes and fails to remain illuminated).
- If several radio interfaces are in use, this increases the load on the DECT frequency band. Due to the component tolerances, the available DECT band frequency range can only accommodate approx. 8 CEREC3 devices. This can be seen when it takes longer (up to 2 minutes) for the pairs of DECT radio signals to link up. It is not possible to connect the PC to the milling unit until the DECT pairs are linked (left LED remains illuminated),
- When using several pairs of radio interfaces, do not position them close together. Place them 1m apart where possible. Interference occurs if the radio modules are too close.
- If the original Siemens program is used to check the GIGASET M101 data setting, the radio interfaces may block the PC/Milling unit link after exiting the program. This is a common fault in Siemens software used in radio interfaces. To remedy this problem, interrupt the power supply to both radio modules for few seconds. Then switch on the power again and wait until the DECT radio pairs link up.
- Should communication errors occur (Error messages: "Communication interference" or "Milling unit not ready"), this problem can also be remedied by interrupting the power supply to both radio modules for few seconds. Then switch on the power again and wait until the DECT radio pairs link up.

4.17.2 Futaba radio interface (USA/Japan)

The following problems can occur:

- Radio interfaces are not correctly adjusted or are defective. Here, no link is made between the two radio interfaces and the LED CO (left) fails to change from red to green.
- Cable is not properly connected. Here, the CEREC program cannot link up and the data remain in the radio interface buffer for approx. 1 minute. Following an attempted link-up at one of the radio interfaces, this is indicated when the SD or RD LED is illuminated for approx. 1 minute and does not extinguish immediately afterwards.

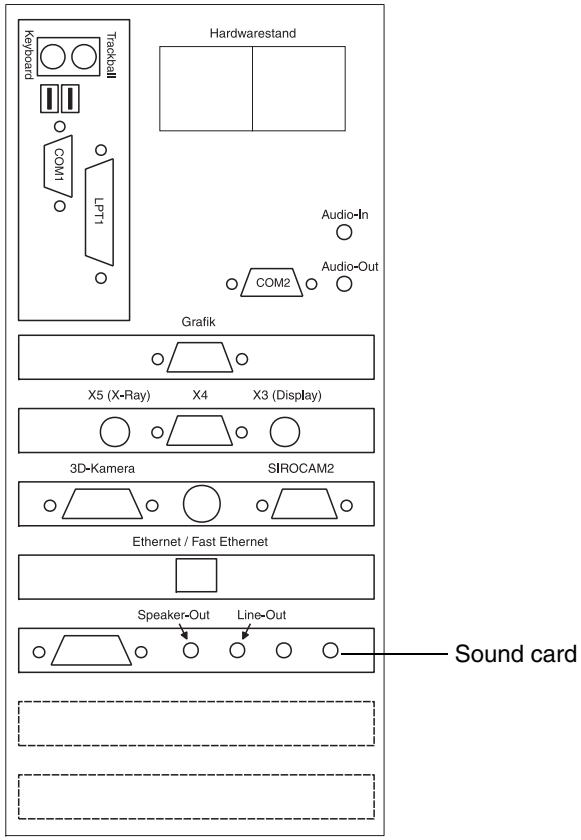
Trackball
Keyboard
Hardwarestand
COM1
LPT1
Audio-In
Audio-Out
COM2
Grafik
X5 (X-Ray)
X4
X3 (Display)
3D-Kamera
SIROCAM2
Ethernet / Fast Ethernet
Speaker-Out
Line-Out
Sound card

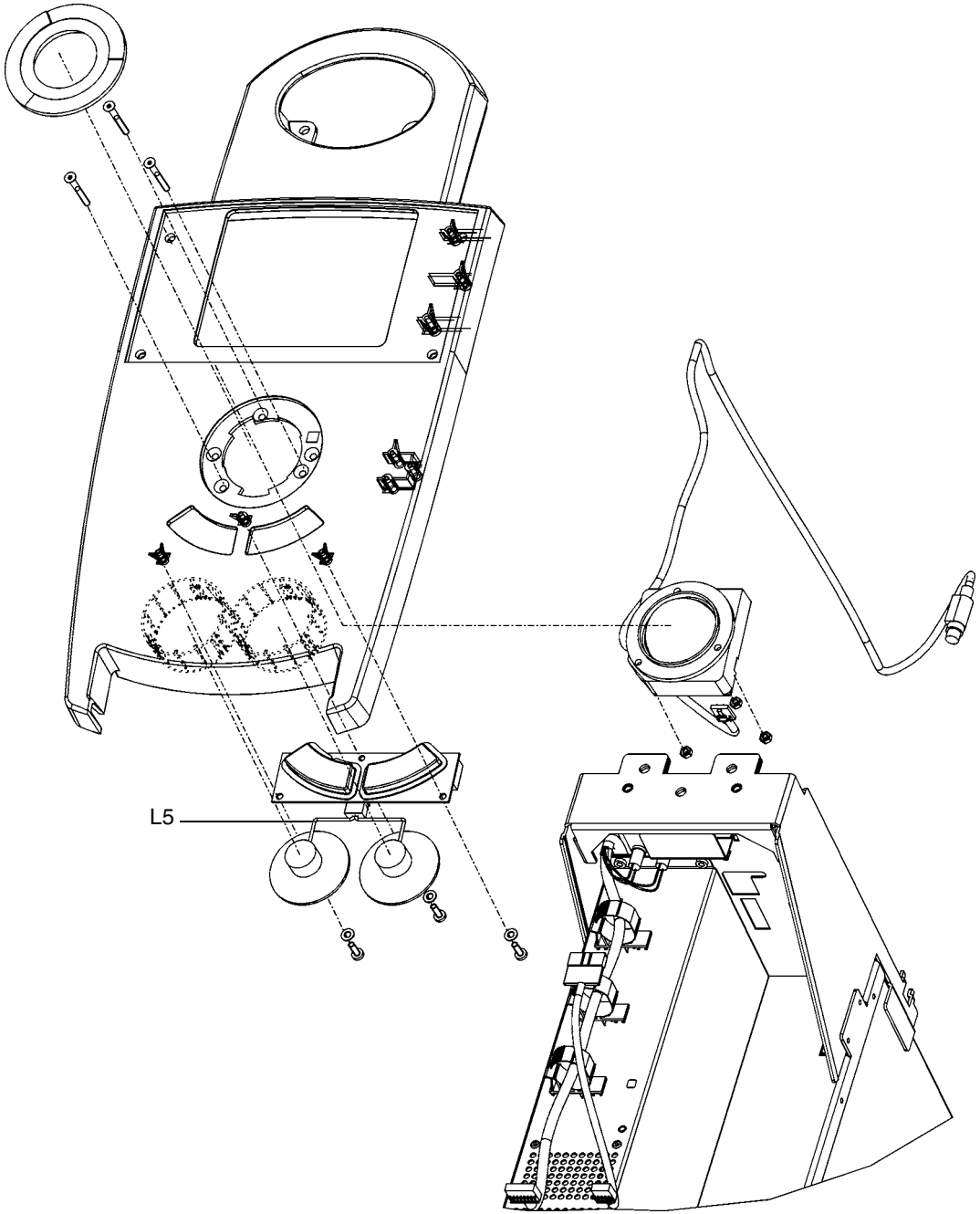
L5

- Check whether the jack connector on the loudspeaker lead is connected to the green socket for the sound card on the PC drawer.
- Check the volume level in Windows.
- Check the L3 lead to the keyboard board.
- Check the L5 lead connecting the keyboard board to the loudspeakers.
- Check whether the loudspeakers are installed in the specified positions.
- Replace the loudspeakers if necessary.

4.18 No sound or sound level too low

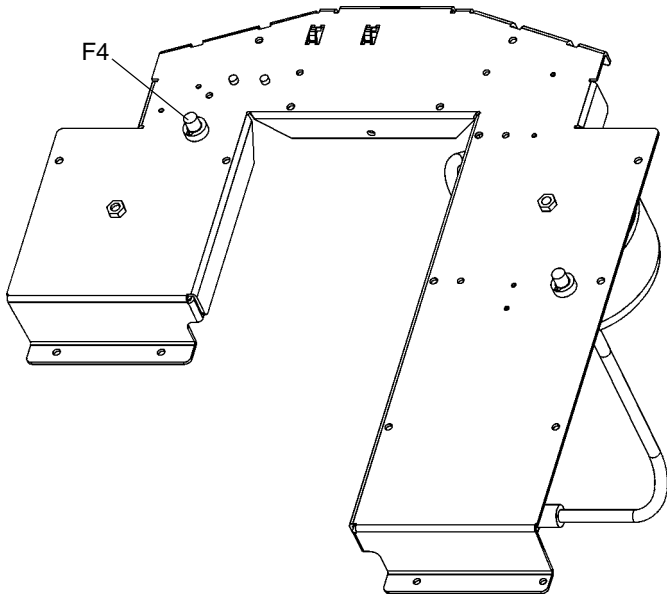
F4

Is the fan inside the Sirocam drawer unit running? If not, check the F4 fuse (T2AH) in the base of the device. Check the Sirocam connection lead. Check the F1 (5AT) and F2 (1AT) fuses on the Sirocam power supply unit plug-in board (Part No. 5854992) in the Sirocam drawer.

Open the SIDEXIS/VIDEXIS application.

Does an error message appear when trying to open the image acquisition window for the live image display as described in the user manual (SIDEXIS/VIDEXIS)? If this happens, check whether there is another PC application running which operates using the Sirocam or CEREC 3D camera. Close this application and retest the Sirocam camera. If another error message appears when trying to open the acquisition window for the live image display, then the Frame Grabber card must be replaced.

Check whether the Sirocam camera is properly connected to the Sirocam drawer.

Does the halogen lamp light up when the Sirocam camera is removed from its bracket? If not, replace the halogen lamp (refer to the operating instructions for the acquisition unit).

If the acquisition window for the live image display in the Videxis/Sidexis application is open when the Sirocam camera is removed from its position and the halogen lamp is illuminated, and there is still no image is displayed, then you must check the lead from the Sirocam module to the PC image acquisition card together with the lead to the camera socket throughout the Sirocam module. If these cable connections are in fault-free condition, then one of the two plug-in printed circuit boards on the Sirocam module (camera board or SIROCAM power supply unit board) is defective. First replace the camera board. If the error persists, replace the SIROCAM power supply unit board.

4.19 No Sirocam camera image

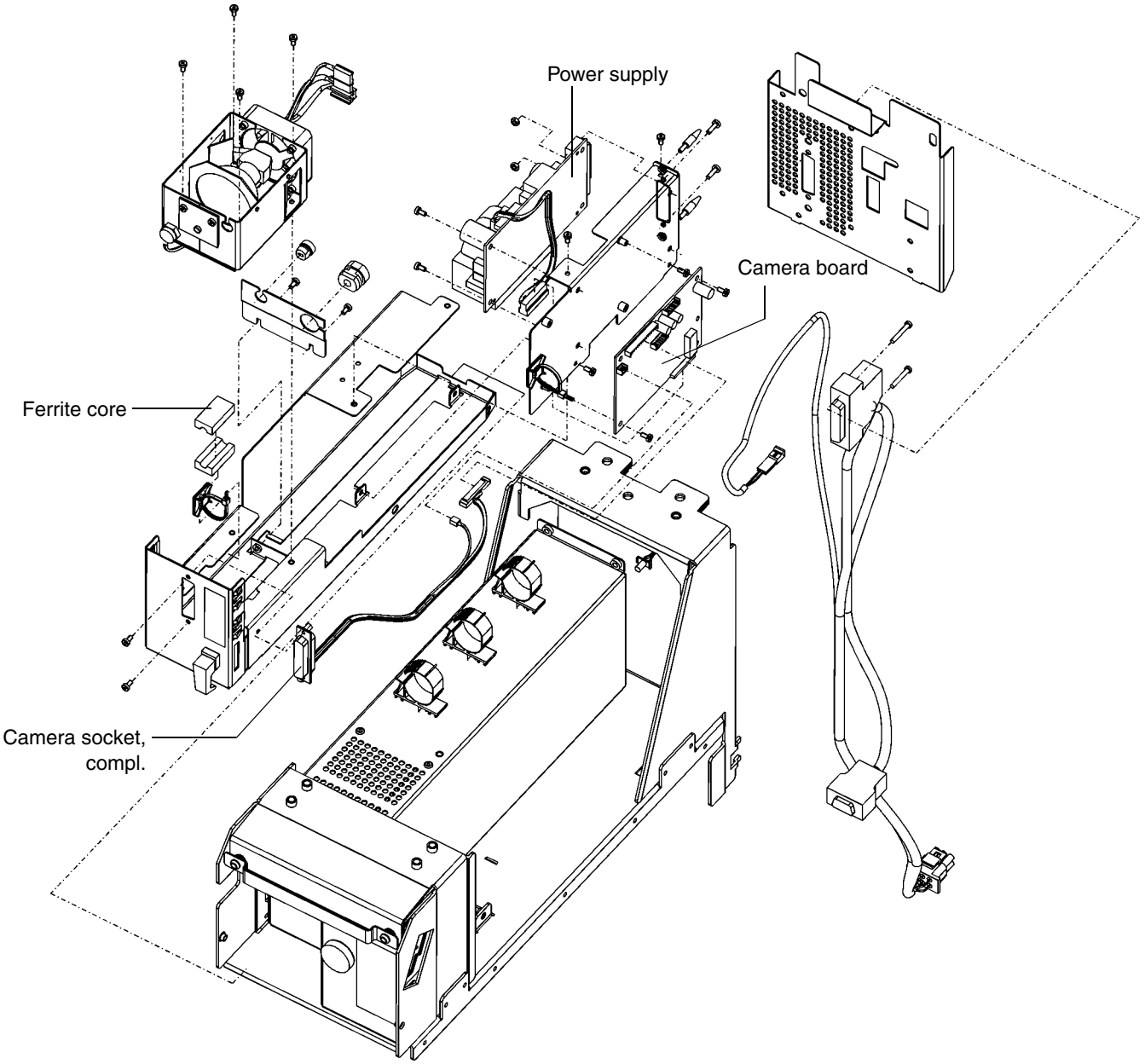
Power supply
Camera board
Ferrite core
Camera socket,
compl.

If interference occurs during live image displays when using the Sirocam camera, the following steps should be taken in the suggested order:

1. The Sirocam module could be incorrectly connected. Remove the Sirocam module once and then reconnect it. Recheck the camera image.
2. Does the screen interference increase/decrease by shaking the camera cable (at camera end or plug end)? If so, replace the Sirocam camera together with the camera socket lead (Part No. 5811232).
3. Check the continuity in the lead connecting the Sirocam module to the image acquisition (Frame Grabber) card in the PC (compare with circuit diagram specifications). If the interference increases/decreases by shaking the cable, replace the Sirocam lead (Part No. 5832865).
4. If the screen interference forms horizontal lines, this is probably due to a fault on the image acquisition card in the PC drawer. Replace the image acquisition (Frame Grabber) card.
5. Diagonal lines running across the screen, as opposed to localized interference, are probably due to a fault in the camera electronics on the camera board (Part No. 5864629) or in the camera socket* leads (Part No. 5811232) and the Sirocam lead (Part No. 5832865). These components must be replaced one after another until the fault has been remedied.

* Check whether the ferrite core is fitted.

4.20 Sirocam camera image interference

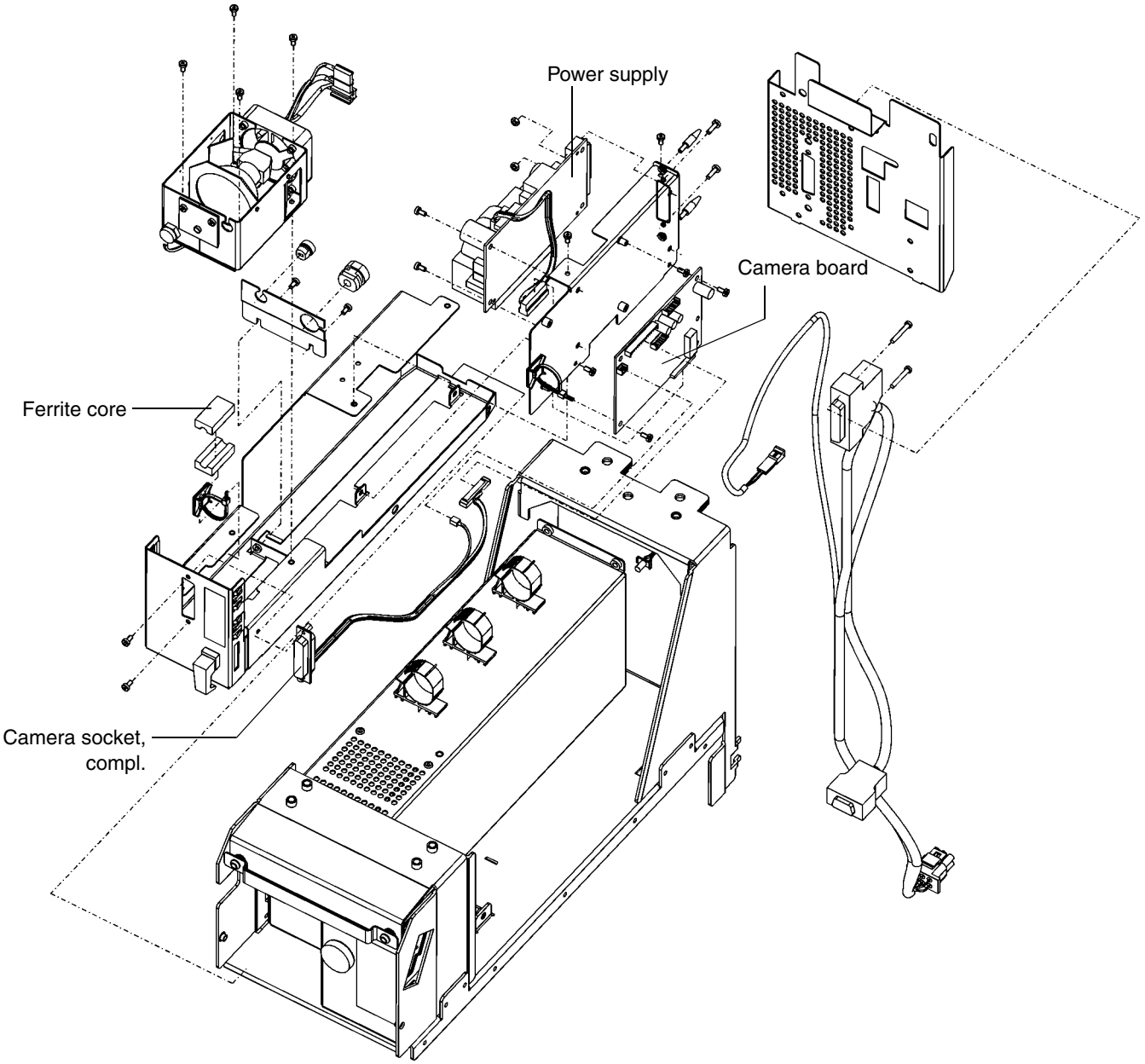
Power supply
Camera board
Ferrite core
Camera socket,
compl.

- If only a black/white image appears, it is necessary to check the color intensity and tone settings in SIDEXIS/VIDEXIS. The tone should be set to 0 and the color intensity to approx. 80. If these settings are correct, the fault is probably caused by a defective Sirocam lead (Part No. 5832865). If a replacement lead fails to remedy the fault, the Frame Grabber card must be replaced.
- If the image is too weak, too dark or the colors are too faint, it is necessary to check and possibly change the brightness, contrast, intensity and tone settings in SIDEXIS/VIDEXIS. If changes are made, make sure you exit the Settings window by selecting OK so that the new values are permanently saved. The recommended default control settings are: BRIGHTNESS=110, CONTRAST=70, TONE=0, COLOR INTENSITY=80.
- If the image is still poor, the SIROCAM camera and/or camera board must be replaced.

4.21 SIROCAM camera: Incorrect image settings

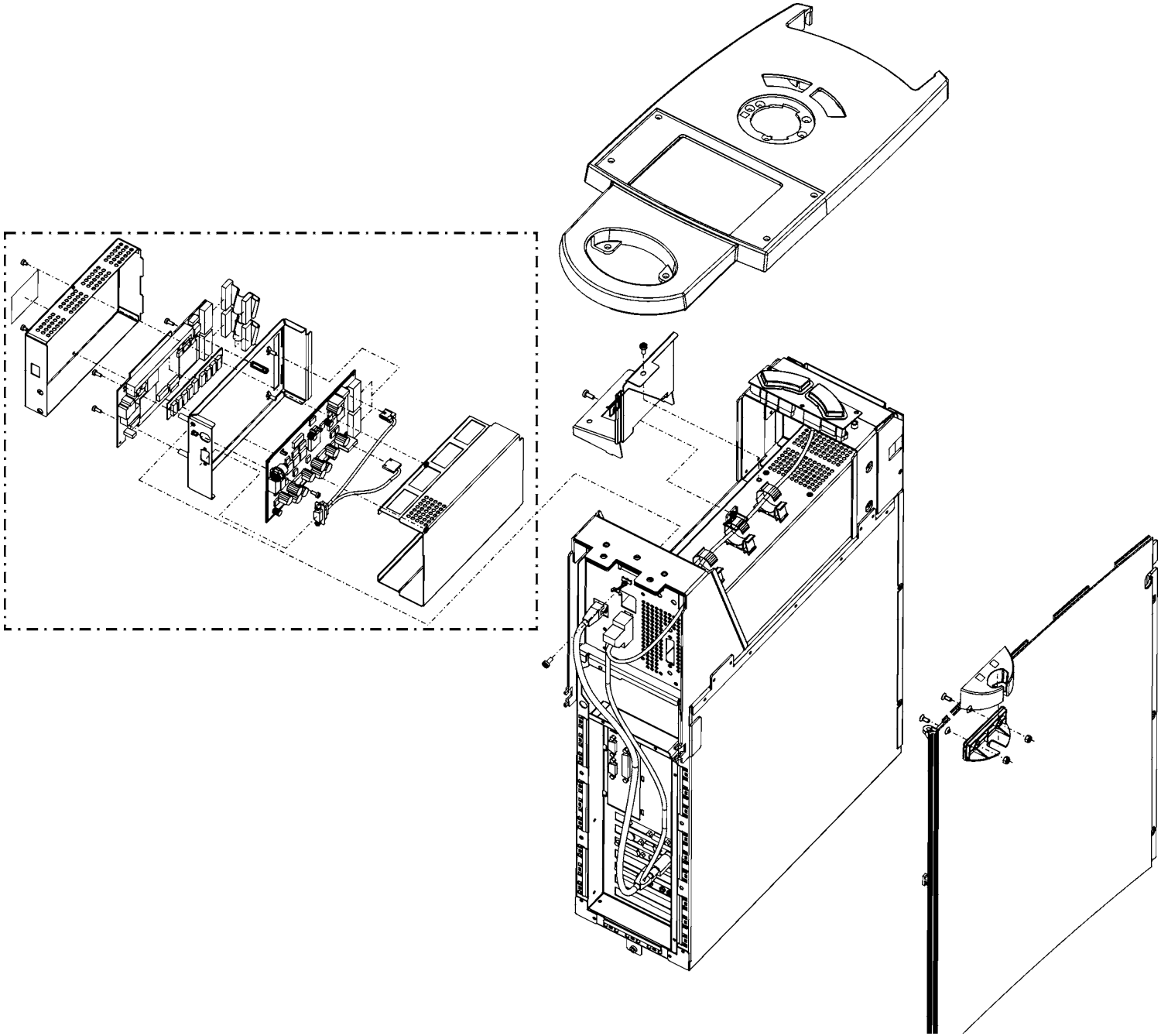

Should you encounter problems with the digital X-ray box in the acquisition unit, the following procedure is recommended:

1. Is the PC switched on and can an image be seen on the monitor?
2. Check the supply voltage to the X-ray box. Is the X-Ray lead (Part No. 5832832) properly attached? Can approx 5.2 V be measured at the 9-pin D-SUB plug between Pins 7 (+5.2V) and 8 (GND)?
3. Is the X-ray box connected to the practice network and directly linked to the PC ethernet card in the acquisition unit?

If points 1-3 can be confirmed, the faults must be localized with the aid of the SIDEXIS Intraoral service handbook.

sirona
The Dental Company

5 Settings

CEREC 3

Settings

List of Contents

5.1 Monitor Settings 5-3
5.2 Calibrating the 3D camera 5-4
5.3 Pairing the DECT-radio interface (EU) 5-5
5.4 Replacing a module of the DECT radio interface (EU) 5-8
5.5 Pairing the Futaba radio interface (USA/Japan) 5-9

5.1 Monitor Settings

Factory Settings

The monitor is supplied with the following factory settings:

- Brightness: 140
- Contrast: 130
- Press SELECT/AUTO twice to adjust the image position.

Setting the brightness and contrast

The brightness and contrast can be set to match individual working environments. The brightness can be adjusted without pressing the MENU button by using the ◀and ▶ buttons. To adjust the contrast, first press the MENU button. Provided that the on-screen display can be seen, it is possible to press the ◀ and ▶ buttons to adjust the contrast. When the on-screen display disappears, the setting entered last is stored automatically.

Setting the image and phase position

It may occasionally be necessary to readjust the image position and the phase position of the pixels on the monitor. In this case, proceed as follows:

1. First, boot your PC. Next, press the SELECT/AUTO monitor button twice to allow the monitor to self adjust.

   If you are not satisfied with the monitor settings, more precise adjustments can be made by carrying out the instructions below.

2. Start the NTEST.EXE program (C:\Programs\NTEST\NTEST.EXE).

3. Position the mouse pointer on the RESOLUTION icon.

   Press the left trackball button once and press the right trackball button once.

   Fine black vertical lines over a white background appear on the screen.

4. Press the Menu button on the monitor twice (main menu, page 2) and then press SELECT/AUTO twice ("FREQUENCY").

   Use the ◀ and ▶ buttons to adjust the monitor until there is no vertical interference visible in the display.

   There is still fine horizontal interference running across the display. To minimize this interference, press the SELECT/AUTO button again and select "TRACKING". Use the ◀ and ▶ buttons to optimize the horizontal settings on the monitor.

5. Press the right trackball button to return to the NTEST main screen.

   Press the Menu button on the monitor several times until "Main Menu Page 2" is displayed.

   Press SELECT/AUTO, select "HORIZONTAL POSITION" and "VERTICAL POSITION" and adjust the position of the display using the ◀ and ▶ buttons. It is important that each of the outer edges can be seen. The monitor settings are automatically saved when the on-screen display disappears.

5.2 Calibrating the 3D camera

Refer to the Section with the same title in the acquisition unit instructions.

5.3 Pairing the DECT-radio interface (EU)

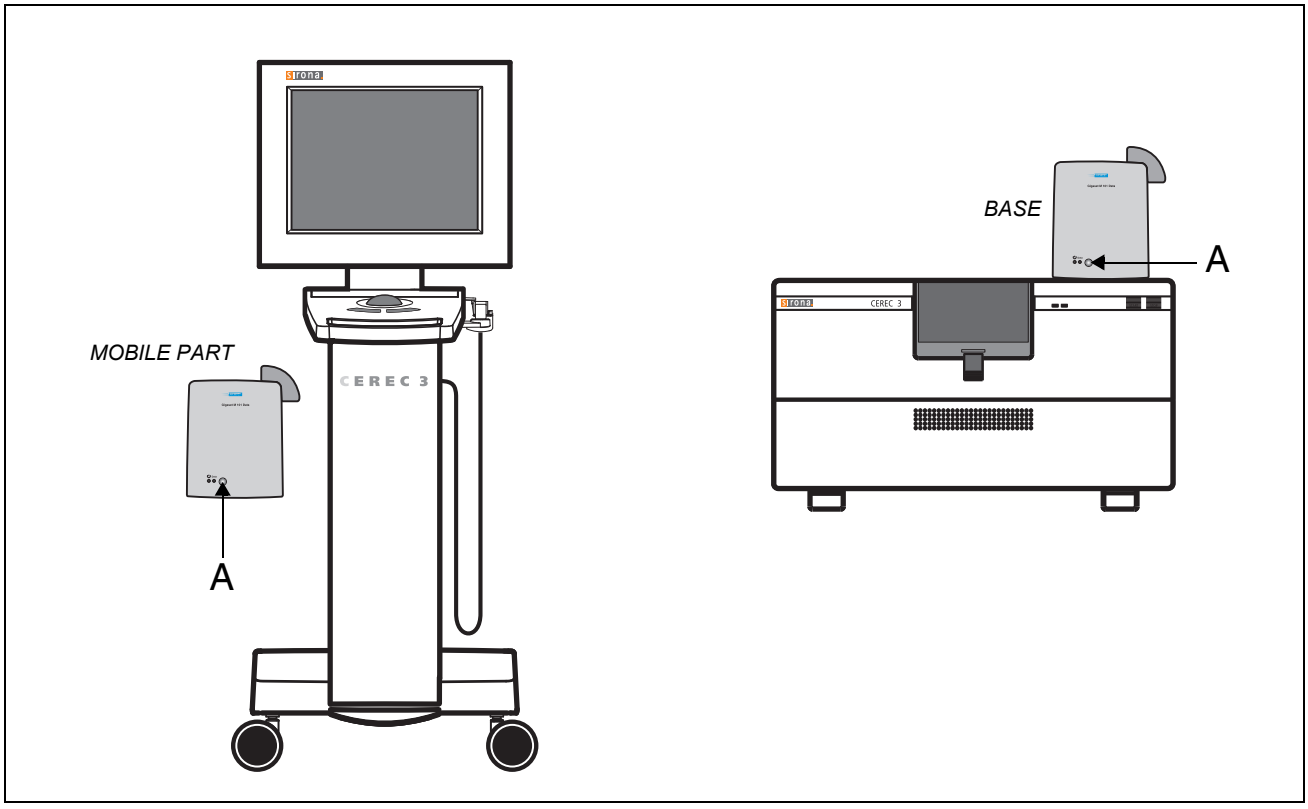

The DECT radio interface is paired using the original Siemens program on the CD supplied with every DECT pair. A standard handbook containing clearly presented explanations of all the procedures is also supplied with every DECT pair.

Quick reference guide:

1. Install the original Siemens program from the original CD or from the directory **C:\sirona\gigaset**.

   However, make sure that you select the latest program version displayed in the "Gigaset M100 Data SETUP" window following each system start.

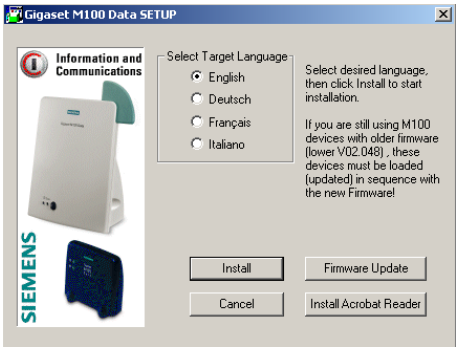

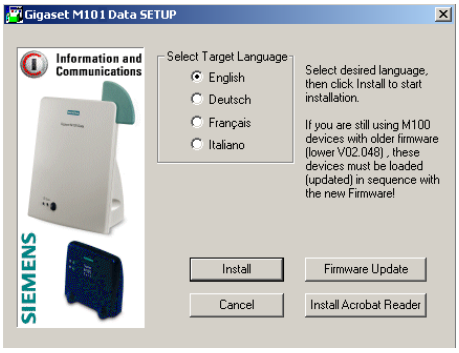

The old program which appears in the "Gigaset M101 Data SETUP" window should no longer be used, since it fails to recognize modules equipped with new firmware.

2. If you are not sure whether both DECT radio interfaces are adjusted to the default settings, reset to the default settings.

   For this, take each of the radio interfaces, hold down the black button **A** and plug the power supply unit into the electric outlet. Hold the button down for 30 seconds.! No LEDs should be illuminated during the first 10 seconds. The right LED should then come on.

   The radio interface is set to the default settings after the right LED has extinguished.

3. Disconnect both radio interfaces from the power supply for a few seconds.

   Reconnect the two radio interfaces to the power supply.

4. Now attach one radio interface to the COM1 socket on the PC. Place the other radio interface beside it, without connecting it in series.

! ***CAUTION***

The radio interface connected to the PC will be used as the MOBILE UNIT and integrated in the PC later on.
The other radio interface will be used as the BASE. It will be attached to the milling unit later on.

5. Start the ***Siemens program***
6. Click on ***Install*** and then ***Local Station***.
7. Hold down the black **A** button on the BASE for more than 10s.

   The flashing LED on the left should flash for 10 seconds, and then both LEDs should begin to flash alternately.

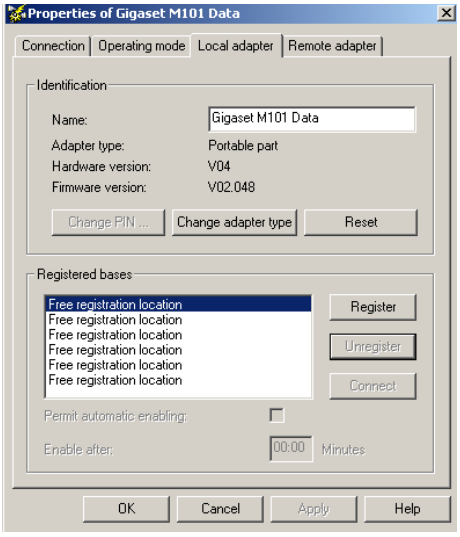

8. Click ***Register***.

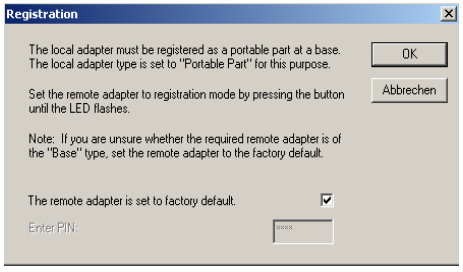

Confirm the following window with ***OK***.

9. After a few seconds, the MOBILE UNIT detects the BASE and this is indicated in the program. Click ***Remote adapter*** to view the BASE which has been logged on.

10. Click ***Operating mode***

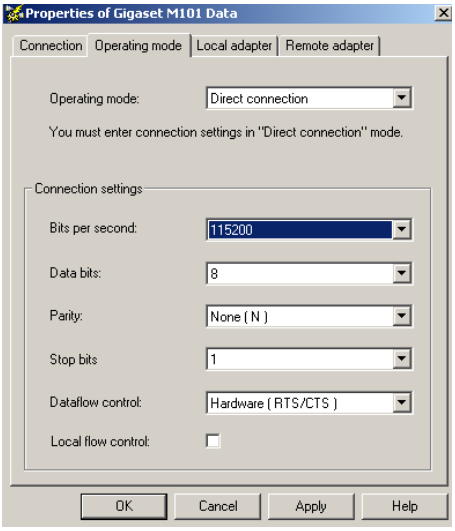

11. Select the following settings:

- Operating mode "Direct connection",
- Bits per second "115200",
- Data bits "8",
- Parity "None (N)",
- Stop bits "1" and
- Data flow control "Hardware (RTS/CTS)".

12. Click ***Apply***.
The two radio interfaces are now configured using the specified baud rate and flow control.

13. Click ***OK*** to exit the program.

14. Disconnect both radio interfaces from the power supply for a few seconds.

Restart. The radio interfaces are now ready for operation.

5.4 Replacing a module of the DECT radio interface (EU)

If one of the two radio interfaces must be replaced by a new module, first make sure that both modules have been programmed with the same firmware.

To do this, proceed as follows for both modules one after the other:

1. Connect module to COM1 port of PC.

2. Insert the CD-ROM supplied with the spare part in the CD-ROM drive.

   After starting the Siemens program, press the ***"Firmware Update"*** button

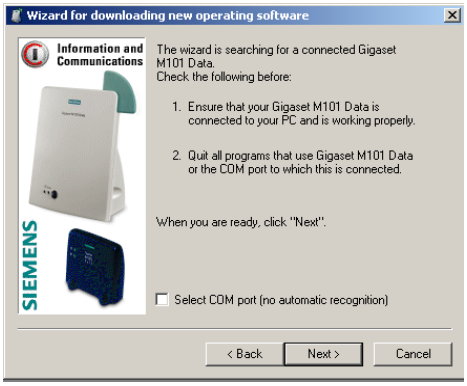

3. Confirm the Identification window with ***Next***.

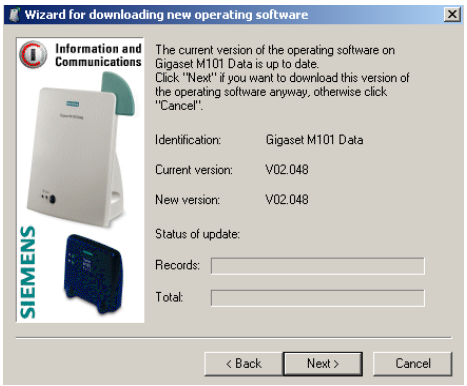

The current version of the firmware in the module is then displayed.

4. If the current version and the latest version on the CD-ROM **are identical**, you can terminate the program.
5. If the current version and the latest version on the CD-ROM **are not identical**, press the ***Next*** button.

   The module will then be programmed with the latest firmware (this takes about 5 minutes).

5.5 Pairing the Futaba radio interface (USA/Japan)

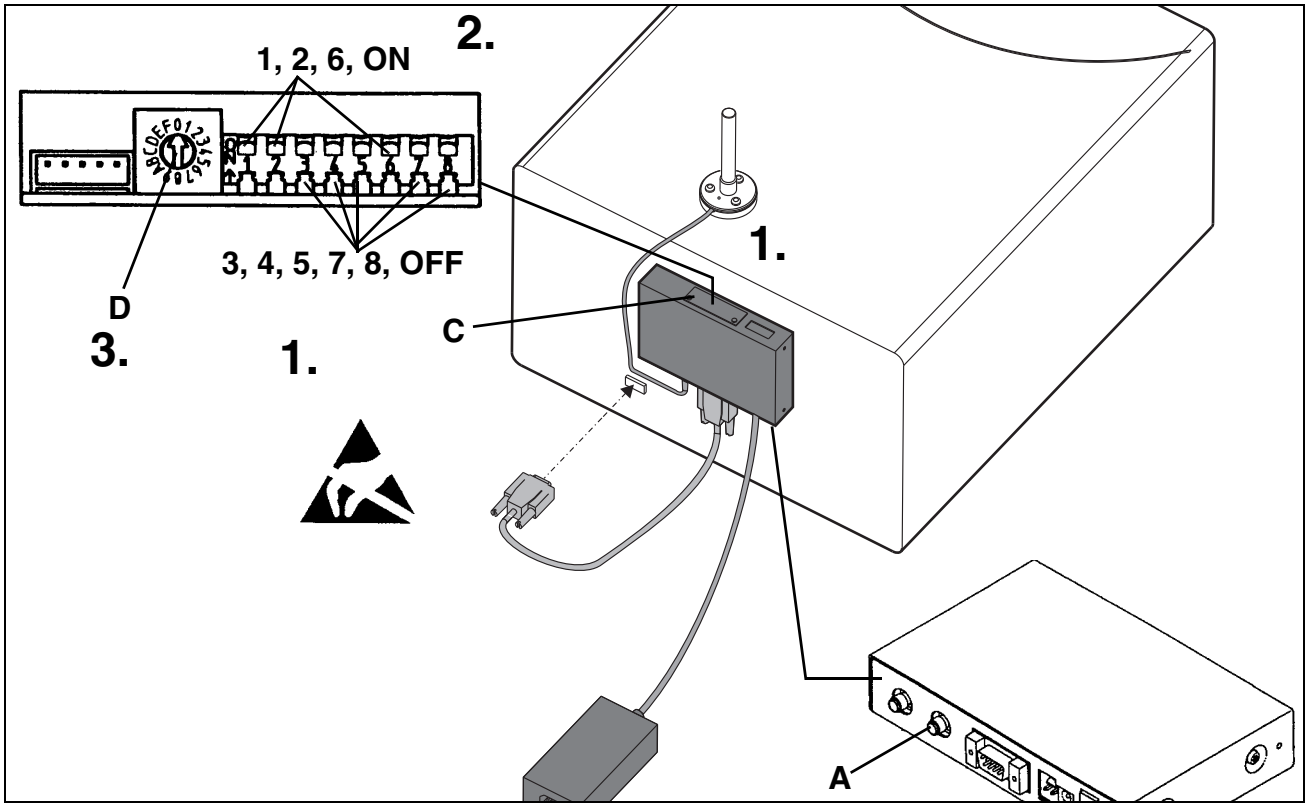

! ***CAUTION***

*Do not use the Futaba radio interface without the aerial! It must always be connected to aerial connection **A**.*

In order to provide a communication link between the two radio interfaces, it is necessary to check/adjust the following:

1. Loosen cover **C** using a small screwdriver and slide it open.
2. On the DIL switch panel, switches 1, 2 and 6 must be pointing upwards (ON) and the others must be pointing downwards (OFF).

All radio interfaces are supplied with the same transmission frequency setting. If several radio interfaces are used in overlapping ranges, they must be adjusted to different transmission frequencies.

3. On each of the **two** pairs of linked radio interfaces, the rotary coding switch **D** must be set to between **0** and **7**.

! ***CAUTION***

Switch positions 8 to15 (F) must not be used.

5.5 Pairing the Futaba radio interface (USA/Japan)

Different switch settings must be used on all pairs of radio interfaces in operation in the same area. This limits the number of radio links which can be used in one area to a maximum of 8 pairs.

If the settings are changed, interrupt the power supply for a few seconds to make sure that the new switch positions are registered in the internal logic elements.

The Futaba radio interface is now automatically set to a baud rate of 19200 and the hardware flow control is configured.

sirona
The Dental Company

6 Acquisition Unit: Repairs

CEREC 3

Acquisition Unit: Repairs

List of Contents

6.1 Electrical and Electromechanical Components 6-4
6.2 Mechanical components 6-30

6.1 Electrical and Electromechanical Components

NOTE

When replacing electrical and electromechanical components, please refer to the wiring diagrams of the exposure unit to determine the correct designations for fuses, leads and PC boards.

6.1.1 Fuses

Fuses generally may be replaced only with fuses of the same type and size. The following fuses can be replaced by a service engineer on site:

Line power supply input filter fuses F1 and F2

Replacement of the **F1** (T5AH/from Series No. 3300: T6.3AH) and **F2** (T5AH/ from Series No. 3300: T6.3AH)fuses in the line power supply input filter is explained in the Section "Main fuses" in the acquisition unit instructions.

Secondary circuit fuse, isolating transformer F3

In order to change fuse **F3** (T1.25AL), you must first place the acquisition unit on its side. The fuse holder for F3 is mounted on the bottom side of the unit base.

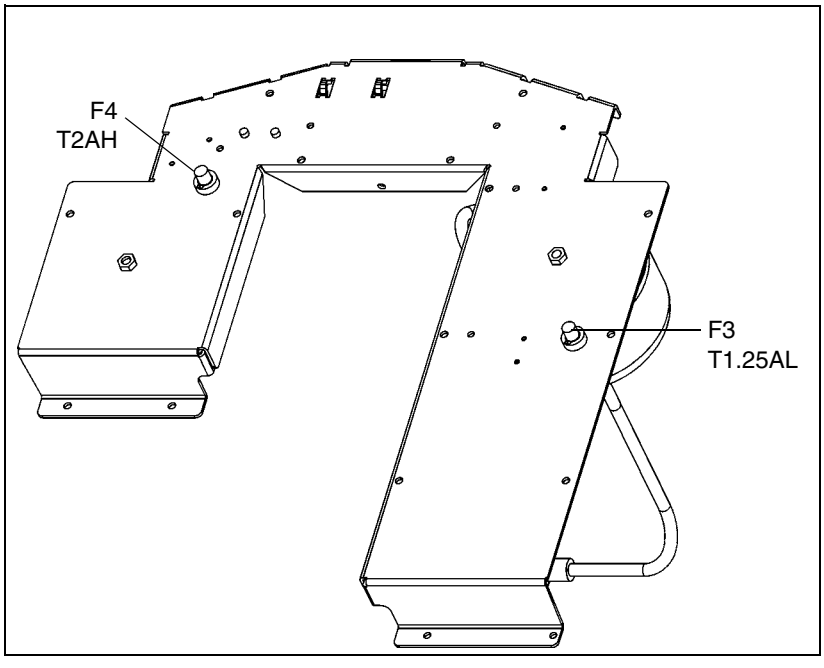

Sirocam heater fuse F4

In order to change fuse **F4** (T2AH), you must first place the acquisition unit on its side. The fuse holder for **F4** is mounted on the bottom side of the base plate.

Fuses on the video power supply unit board

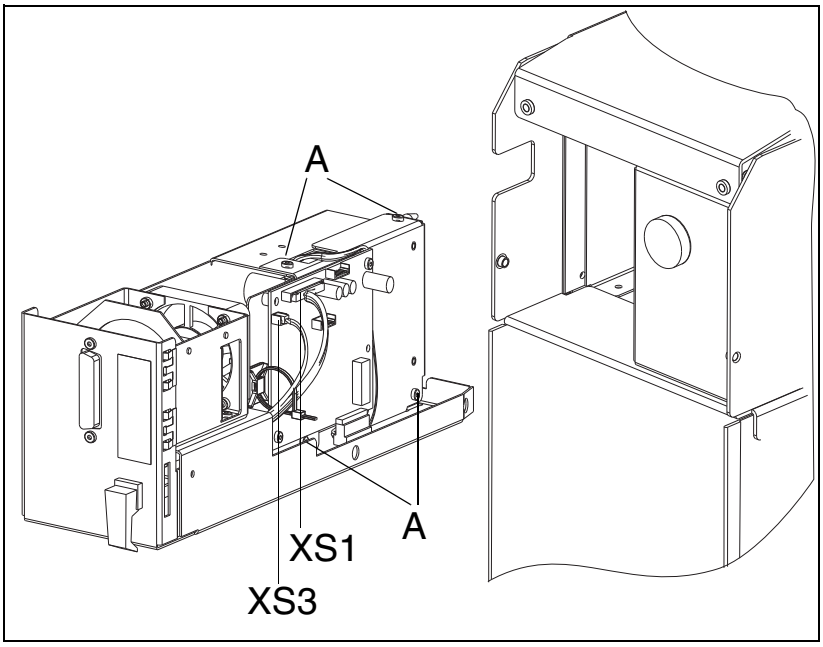

The Sirocam module must be pulled out of the acquisition unit in order to change the fuse on the power supply unit PC board. Proceed as follows:

1. Disconnect connectors **XS1** and **XS3** from the camera board.
2. Remove the four screws **A** from the shield plate.
3. Fold out the shield plate from the side. The power supply board can now be seen.
4. Now replace fuses **F1** (T5AH) and F2 (T1AL) on the video power supply unit board.
5. Reinstall and screw on the shield using the 4 screws (**A**).
6. Plug connectors **XS1** and **XS3** back in.

! ***CAUTION***

*Make absolutely sure that two-pin connector **XS3** is plugged in to the left edge of the video board as shown.*

7. Slide the Sirocam module into the acquisition unit and connect the Sirocam camera.

6.1.2 PC Acquisition Unit

Part No.: 58 73 042
Rep. Part No.: 58 65 519

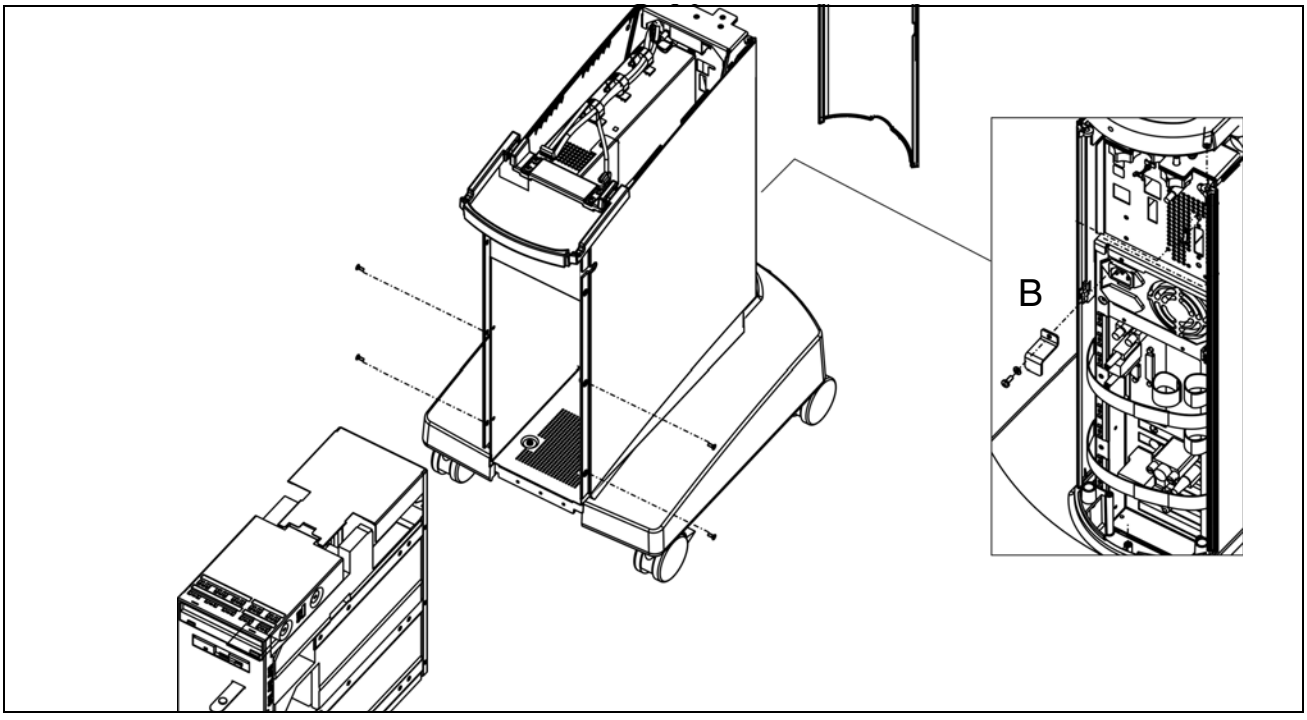

To replace the PC drawer, proceed as follows:

1. Switch off the acquisition unit and disconnect the power plug.
2. Remove the rear section.
3. Unscrew and remove all cables from the back of the PC.
4. Unscrew bracket **B** located above the power plug on the PC power supply and disconnect the power plug.
5. Open the front door, pull apart the Velcro fastening and open the door fully, allowing the pedal to drop down.
6. Remove only the two bottom screws in the side sections on each side.
7. The PC drawer can now be pulled forwards and out of the acquisition unit.
8. To fit the PC drawer, carry out the same steps but in reverse order.

! ***CAUTION***

Make absolutely sure that bracket B is screwed on correctly above the power plug on the PC power supply. It forms a grounding point between the PC housing and the device chassis.

9. Move the pedal up and secure. If necessary, press the retaining spring back slightly to make it easier to insert the pedal.

6.1.3 DECT Power Supply Board

Part No.: 58 73 083
Rep. Part No.: 58 65 584

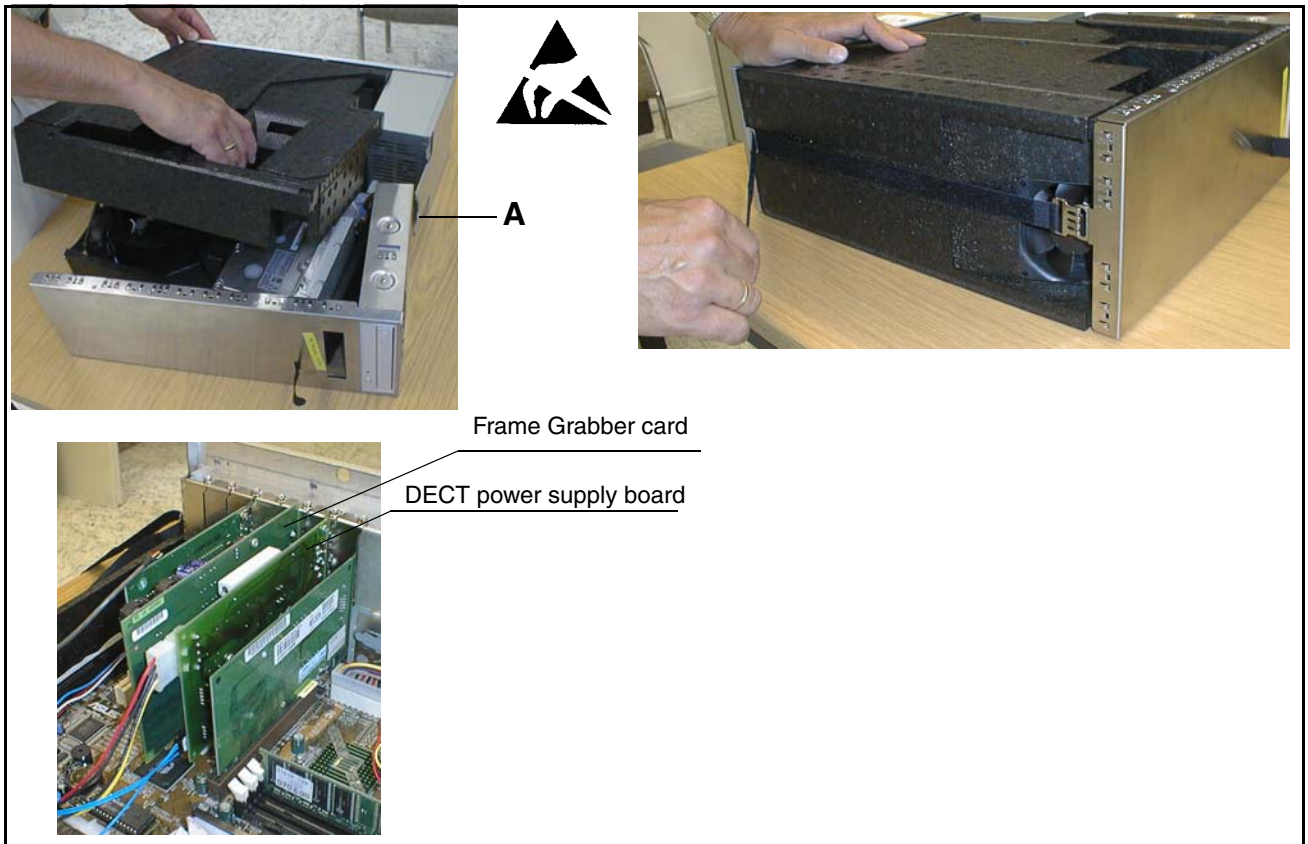

1. Perform points 1 to 7 in the instructions for replacing the PC Acquisition Unit.
2. Undo the strap on the bottom of the PC.
3. Unlock housing catch **A** und pull front section with drive forward (CAUTION: leads).

   Lift off foam plastic shell and lay it aside.
4. Unscrew and remove the screw.
5. Disconnect plugs **X1** and **X2**.
6. Remove the DECT power supply board.
7. Plug connectors **X1** and **X2** into the DECT power supply board supplied Insert the board and screw it on firmly.
8. Position foam plastic shell, making sure that the drives are correctly positioned.
9. Slide on the front part until it locks into place.
10. Attach the strap and tighten.

6.1.4 Frame Grabber card

Part No.: 58 73 091
Rep. Part No.: 58 65 592

1. Perform points 1 to 4 of the instructions for replacing the DECT Power Supply Board.
2. Remove the frame grabber card, insert a new card and screw on firmly.
3. Perform points 8 to 10 of the instructions for replacing the DECT Power Supply Board.

6.1.5 Complete power supply unit

Part No.: 58 09 889
Rep. Part No.: 58 65 550

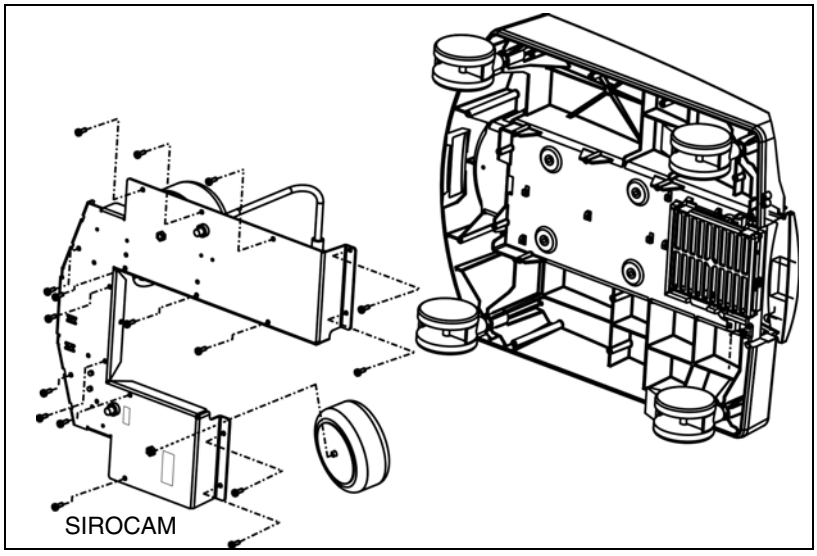

To replace the power supply unit, proceed as follows:

1. Switch off the acquisition unit and disconnect its power plug.
2. Remove the rear section, unscrew and remove the three screws on the cover plate and remove the plate.
3. Unscrew the bracket located above the power plug on the PC power supply unit and disconnect the power plug.
4. If necessary, disconnect the plug connection of the monitor power supply (if a power supply unit with a separate monitor power supply is installed).
5. Place the acquisition unit on its side.
6. Remove all holding screws attached to the base plate.
7. Take out the base plate and place it to one side.
8. Disconnect the power cable to the PC power supply unit and the grounding cable on the cover plate.
9. If the acquisition unit is equipped with the SIROCAM option, disconnect lead L12 (SIROCAM lead) at the isolating point to the Sirocam transformer.

CAUTION

The SIROCAM transformer, the fuse holder and the 56W series resistor for the SIROCAM heater as well as the corresponding leads all must be removed and reinstalled in the replacement power supply unit.

10. Insert the power cable to the PC power supply unit and the grounding cable for the cover plate through the rear side of the unit and reconnect lead L12 (SIROCAM lead) if necessary.

11. Insert replacement power supply unit into the base and screw down firmly.

CAUTION

It is important to make sure that the leads are not crushed and that they do not come into contact with the 56W series resistor for the Sirocam heater.

12. Place the acquisition unit in an upright position.

13. Connect power plug to the PC power supply and screw down the bracket firmly.

14. Connect plugs of monitor power supply.

NOTE

If the LCD monitor was powered by the DECT power supply board of the PC drawer before the complete power supply unit was replaced, this will be changed. In the future the monitor will be powered by the separate monitor power supply unit of the "complete power supply unit" module. To perform this conversion, the monitor lead previously used must be replaced with the new one supplied. The procedure for dismantling the front and rear housing covers required to replace the monitor lead is described in the chapters ‘6.2.10 Monitor adapter” and ‘6.2.11 Monitor support, complete” .

15. Screw on cover plate tight with three screws. Also screw grounding cable on to cover plate. Make sure to use the special washer.

16. Attach the rear section and plug in the power cord.

17. If necessary, attach a label specifying the new fuse ratings to the rear side of the unit base. Affix the new label over the old one.

6.1.6 Control unit

Part No.: 58 10 853

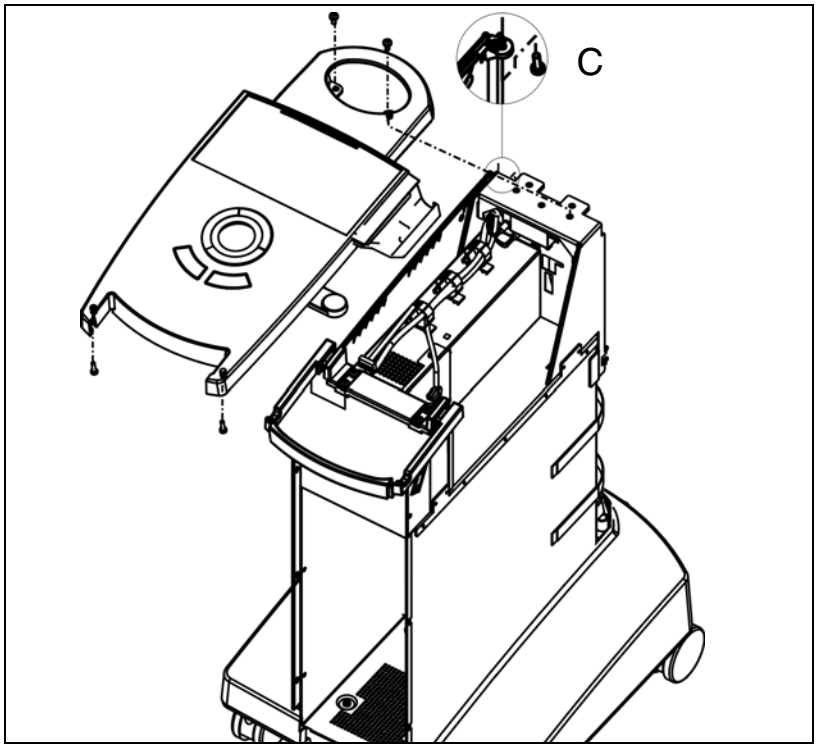

To replace the control unit, proceed as follows:

1. Switch off the acquisition unit and disconnect its power plug.
2. Remove the rear section, detach the VGA lead on the graphics card and the power supply lead to the monitor at the DECT supply point. Remove the star knob screws of the monitor mounting and lift the monitor off of the acquisition unit.
3. Disconnect the cameras from the acquisition unit and keep in a safe place.
4. Unscrew the control unit at the rear end of the handle and at the monitor support. Unscrew and remove **C**.
5. Disconnect the keyboard and trackball leads from the PS/2 sockets on the PC.
6. Unscrew and remove the grounding band from the rear side of the unit.
7. Lift the control unit off the acquisition unit and open the cable fasteners.
8. Disconnect leads L3, L10/L20, L13 and HP1 from the keyboard board.
9. Remove the control unit.
10. To install the new control unit, carry out Steps 1-8 in reverse order.

6.1.7 Keyboard board

Part No.: 58 09 954

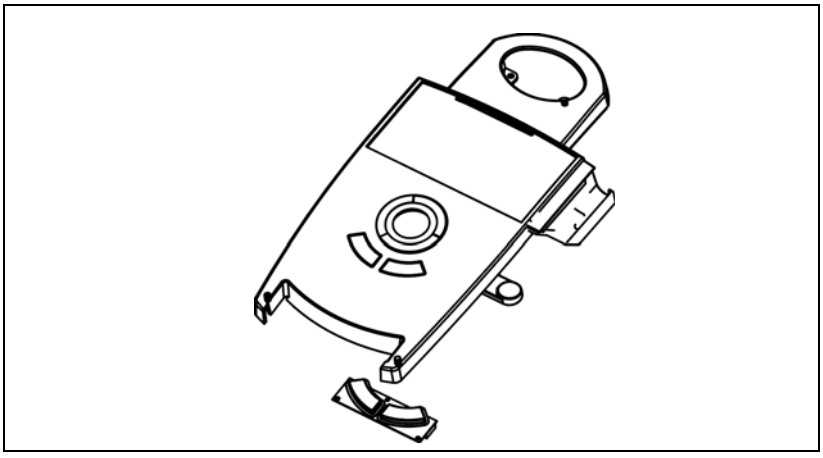

To replace the keyboard board, follow the procedure below:

1. Carry out Steps 1 to 9 in the instructions for replacing the Control unit.
2. Disconnect leads L4, L5 and L7 from the keyboard board.
3. Unscrew and remove the keyboard board.
4. Position the new keyboard board, align (ensuring there is an even gap around the side edges) and screw down firmly.
5. Reconnect leads L4, L5 and L7.
6. Install the control unit in accordance with the instructions for replacing the Control unit.

6.1.8 Keyboard board (L3) lead (L3)

Part No.: 58 10 044

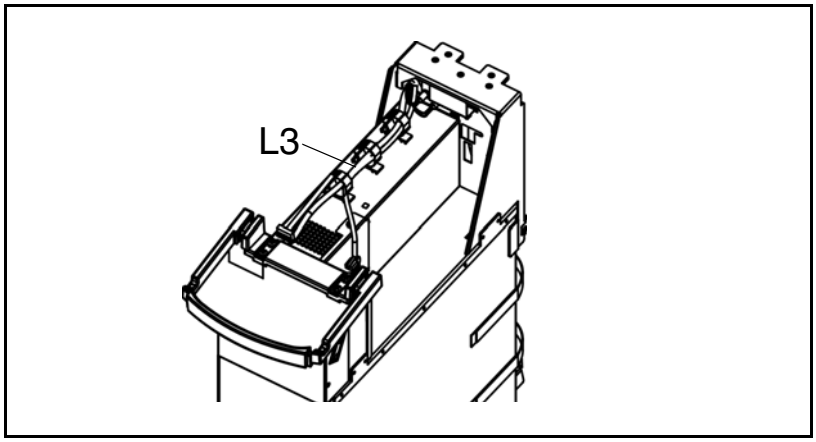

To replace lead L3 on the keyboard board, follow the instructions below:

1. Carry out Steps 1 to 9 in the instructions for replacing the Control unit.
2. »Remove the plug panel on the rear of the device and unscrew the two jack sockets in the panel used for connecting the pedal cable.«

3. Screw in the two jack sockets for the replacement cable.

CAUTION

It is important to make sure that the two sockets are attached in the correct positions!

4. Screw the plug panel back on to the rear of the unit.
5. Complete the installation of the control unit by following the instructions for replacing the control unit.

6.1.9 Complete keyboard

Part No.: 58 10 796

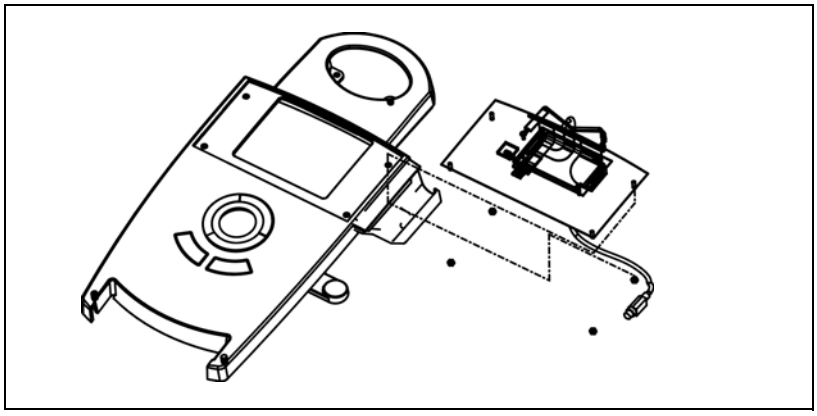

To replace the keyboard board, follow the procedure below:

1. Loosen the four nuts used to attach the keyboard to the control unit.

NOTE

If a Sirocam camera is present, a special screw must be loosened instead of a nut.

2. Unscrew and remove the grounding band on the rear of the unit.
3. Take out the keyboard and disconnect lead L4 on the keyboard controller.
4. Install the new keyboard.

CAUTION

It is important to make sure that the flexible track conductors are properly connected to the keyboard controller board and that no damage is caused to the flexible track conductors.

5. Screw down the new keyboard and align to ensure that there is an even gap around the side edges.
6. Screw the grounding band on to the rear side of the device.

6.1.10 Trackball

Part No.: 58 33 053

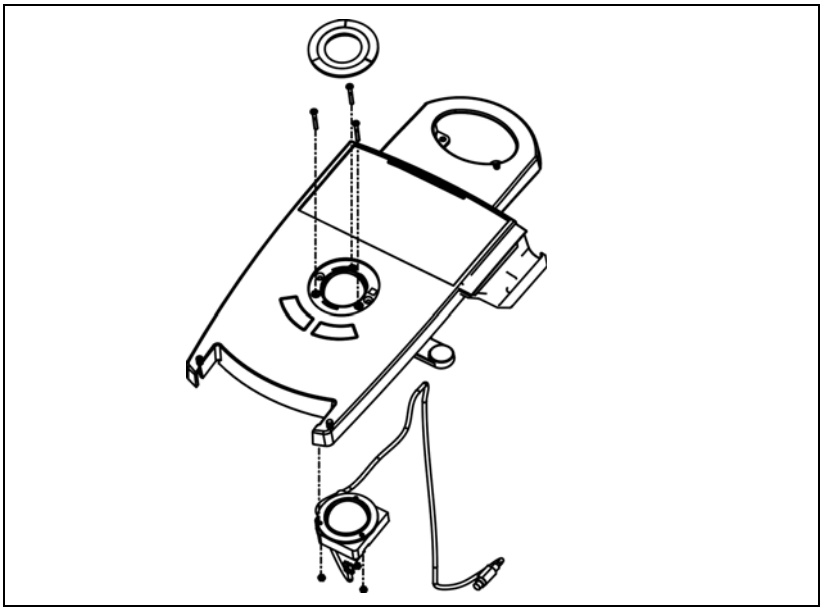

To replace the trackball, follow the procedure below:

1. Unscrew and remove the ring around the ball.
2. Carry out Steps 1 to 9 in the instructions for replacing the Control unit.
3. Disconnect lead L7 from connector X4 of the keyboard board.
4. Undo the screw connection between the trackball and the control unit and remove the trackball from the upper side of the control unit.
5. Position the new trackball on the underside of the control unit and screw in place from the upper side.
6. Reconnect lead L7. Route the lead from the trackball to plug PS/2 on the PC at the rear of the device.
7. To install the control unit, follow the instructions for replacing the control unit.
8. Insert the trackball and screw on the outer ring again.

The ease of action of the trackball can be set by selecting the stop position of the ring.

6.1.11 Loudspeaker unit

Part No.: 58 32 808

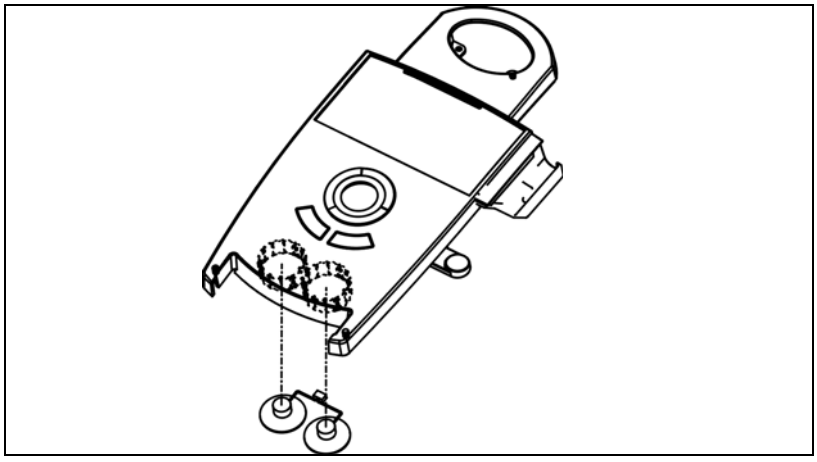

To replace the entire loudspeaker, follow the procedure below:

1. Carry out Steps 1 to 7 in the instructions for replacing the Control unit.
2. Disconnect lead L5 from the keyboard board.
3. Release the two loudspeakers from the spring locks (e.g. with the aid of two small screwdrivers).
4. Connect lead L5 on the new pair of loudspeakers to the keyboard board.
5. Insert each loudspeaker into the side hole indicated by its cable.
6. Install the control unit in accordance with the instructions for replacing the control unit.

6.1.12 Microswitch unit

Part No.: 58 10 739

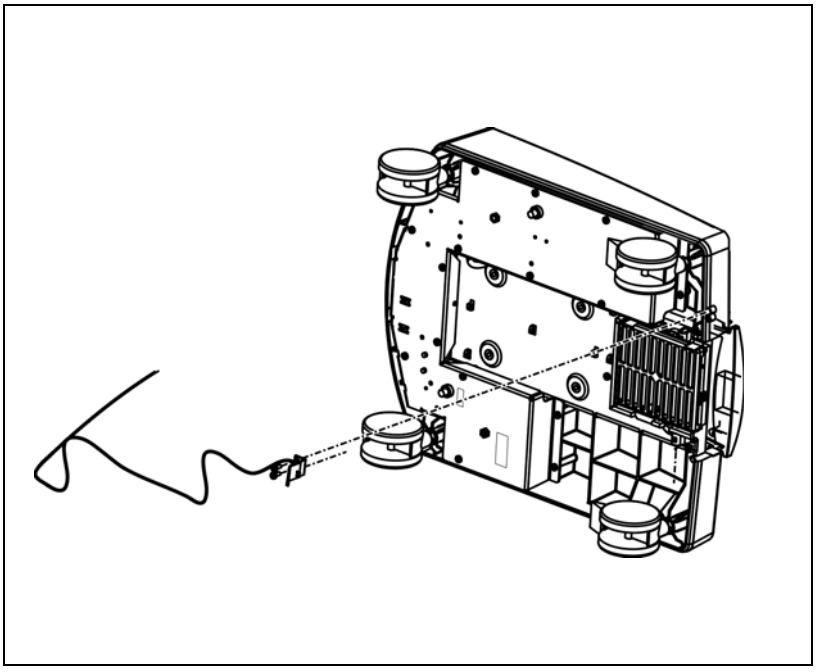

To replace the microswitch, follow the procedure below:

1. Place the unit on its side and fold away the pedal.
2. Use a torque screwdriver to remove the entire microswitch from the unit base.
3. Before fitting the new switch, loosen the screws on the microswitch mounting and then push the switch together inside the elongated slots in order to avoid any damage beforehand.
4. Screw the new microswitch into the unit base and ensure that it is positioned at right angles to the pedal.
5. Move the pedal to its release position at the stop using adhesive tape or by hand.
6. It is important to push the microswitch up as far as possible to allow the microswitch plunger to be held back by the spring clip, without completely bending (or over-bending - see 3.).
7. After the pedal is activated or released, the switch must open from its resting position so that it can be triggered from all sides when the door is closed.

6.1.13 LCD monitor unit

Part No.: 58 10 143
Rep. Part No.: 58 65 535

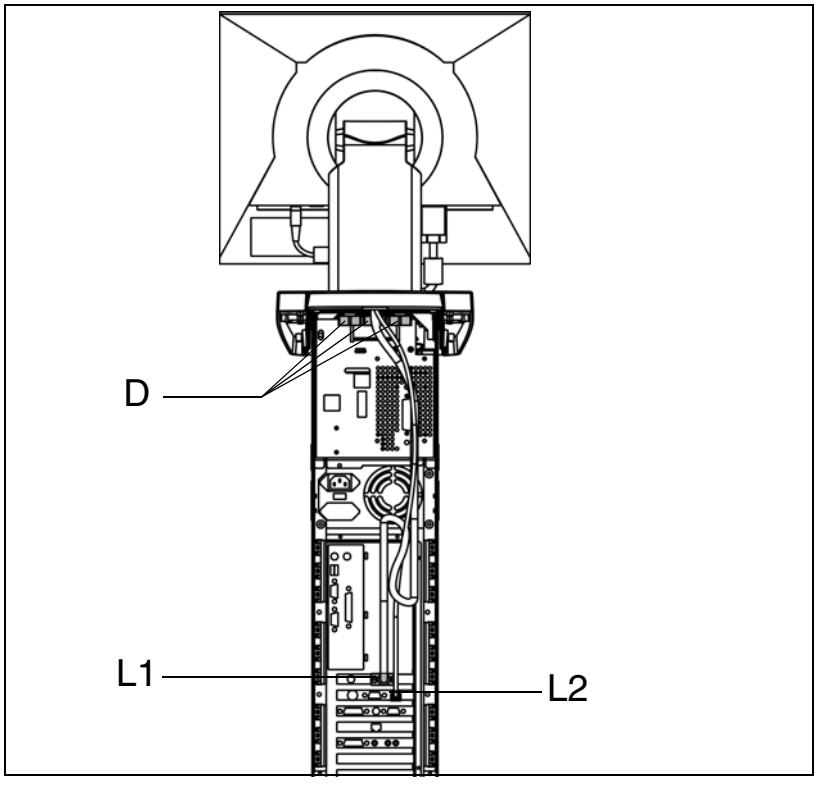

To replace the LCD monitor unit, follow the procedure below:

1. Switch off and unplug the acquisition unit.
2. Take off the back section and disconnect the VGA lead (L1) on the graphics card and the power supply lead to the monitor (L2) at the DECT supply point. Remove the three star grip screws **D** on the monitor mounting and lift the monitor off the acquisition unit.
3. Install the new monitor from above. Here you must feed the VGA lead and the power supply cable for the monitor (L2) through the opening on the monitor support and through to the rear of the unit.
4. Attach the monitor firmly using the 3 start grip screws **D**, starting with one screw at the rear. Screw the VGA lead on to the graphics card and connect the power supply lead for the monitor to the DECT supply.

6.1.14 VGA lead

1. For instructions on how to remove the front and rear monitor panels, see ‘6.2.10 Monitor adapter” and ‘6.2.11 Monitor support, complete” .
2. Replace the VGA lead and reinstall the monitor panels.

6.1.15 3D camera

Part No.: 58 09 863
Rep. Part No.: 58 65 543

To replace the 3D camera, follow the procedure below:

1. Disconnect the old 3D camera from the camera cable and attach the new 3D camera.
2. Calibrate the 3D camera with the aid of the CEREC application (see 3D Camera calibration in the acquisition unit operating instructions).

6.1.16 Cerec camera lead

Part No.: 5832873

To replace the Cerec camera lead, follow the procedure below:

1. Carry out Steps 1 to 9 in the instructions for replacing the Control unit.
2. Disconnect the Cerec camera lead from the image processing board in the PC drawer.
3. Remove the right-hand side section. Here you must remove the three side screws and the rear connecting screw between the side section and the control unit.
4. Remove the old camera lead and install a new one.

! ***CAUTION***

It is important to ensure that the exposed cable between the reinforcing sleeve affixed to the side and the camera plug is exactly the same length as the previous camera cable. It may be necessary to reposition the sleeve on the cable.

5. Connect a new camera lead to the image acquisition card in the PC drawer and screw in place.
6. Install the control unit in accordance with the instructions for replacing the control unit.
7. Insert the side section from the rear of the unit and attach it to the control unit using the three side screws and the connecting screw.

! ***CAUTION***

It is important to make sure that the side section fits snugly into the rear guideways!

6.1.17 Cerec heater

Part No.: 58 11 190

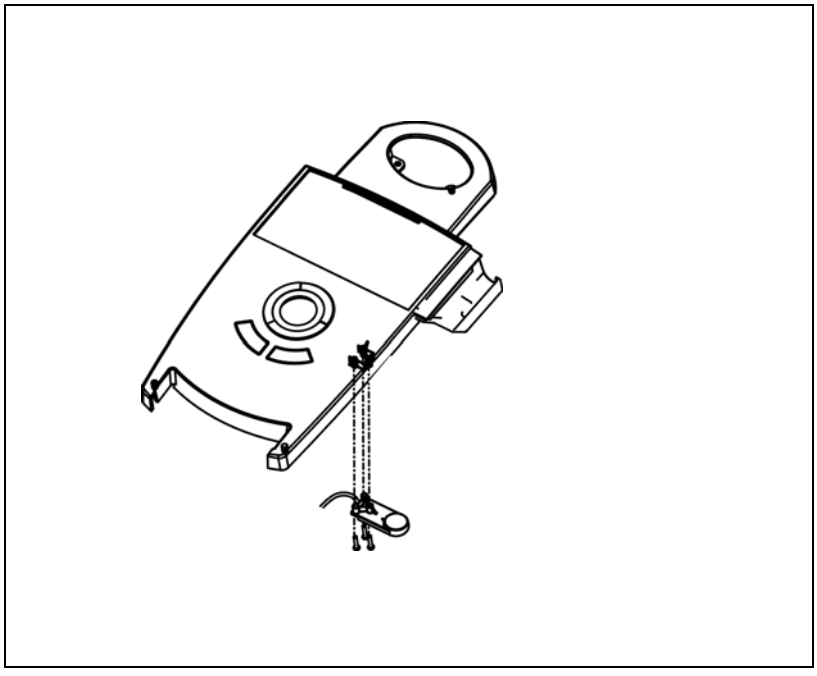

To replace the Cerec heater, follow the procedure below:

1. Carry out Steps 1 to 9 in the instructions for replacing the Control unit.
2. Unscrew the heater from the control unit. Disconnect the cable from the keyboard board and pull it out through the ventilation slot.
3. Feed the connecting cable for the new heater through the ventilation slot and connect the cable to the keyboard board.
4. Screw the heater on to the control unit firmly.

! ***CAUTION***

It is important to make sure that the heater is positioned at right angles to the control unit. If necessary, readjust the heater after installing the control unit.

5. Install the control unit in accordance with the instructions for replacing the control unit.

6.1.18 Cerec camera board

Part No.: 58 64 629
Rep. Part No.: 58 65 568

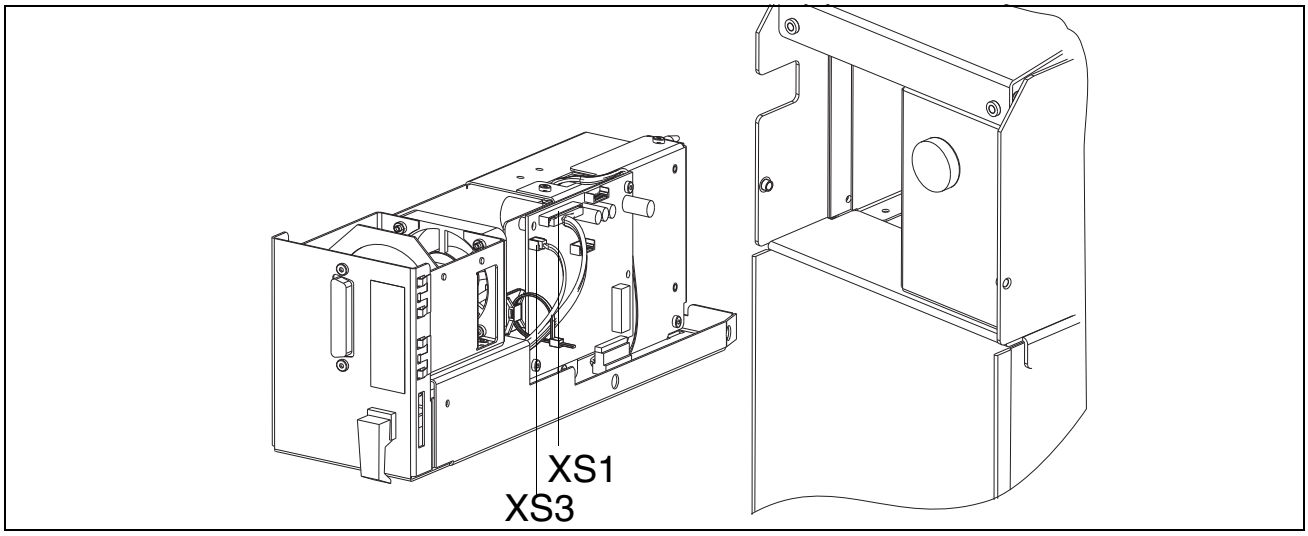

To replace the Cerec camera board, follow the procedure below:

1. Switch off and unplug the acquisition unit.
2. Open the front door, pull apart the Velcro fastening and take off the door carefully.
3. Remove the cover plate.
4. Disconnect the Sirocam plug and place it to one side.
5. Pull out the lock and turn it 90° to the left (CCW).
6. Pull out the Sirocam module completely.
7. Disconnect the two plugs on the lead of the complete camera socket (**XS1, XS3**) from the Cerec camera board.
8. Unscrew the camera board and pull off the Sirocam power supply cable.
9. Connect the new camera board to the Sirocam power supply cable, position and screw together firmly.
10. Connect the two plugs on the complete camera socket lead (**XS1, XS3**) to the Cerec camera board.
11. Slide the Sirocam module into the acquisition unit.

! ***CAUTION***

Make sure that the plug at the end of the rear module is properly inserted into the socket on the matching component!

12. Turn the lock 90° to the right (CW) and then position the locking bar.
13. Plug in the Sirocam and put on the cover plate.
14. Raise the front door, press the Velcro fastening together and close the door.

6.1.19 SIROCAM power supply unit board

Part No.: 58 72 549
Rep. Part No.: 58 72 556

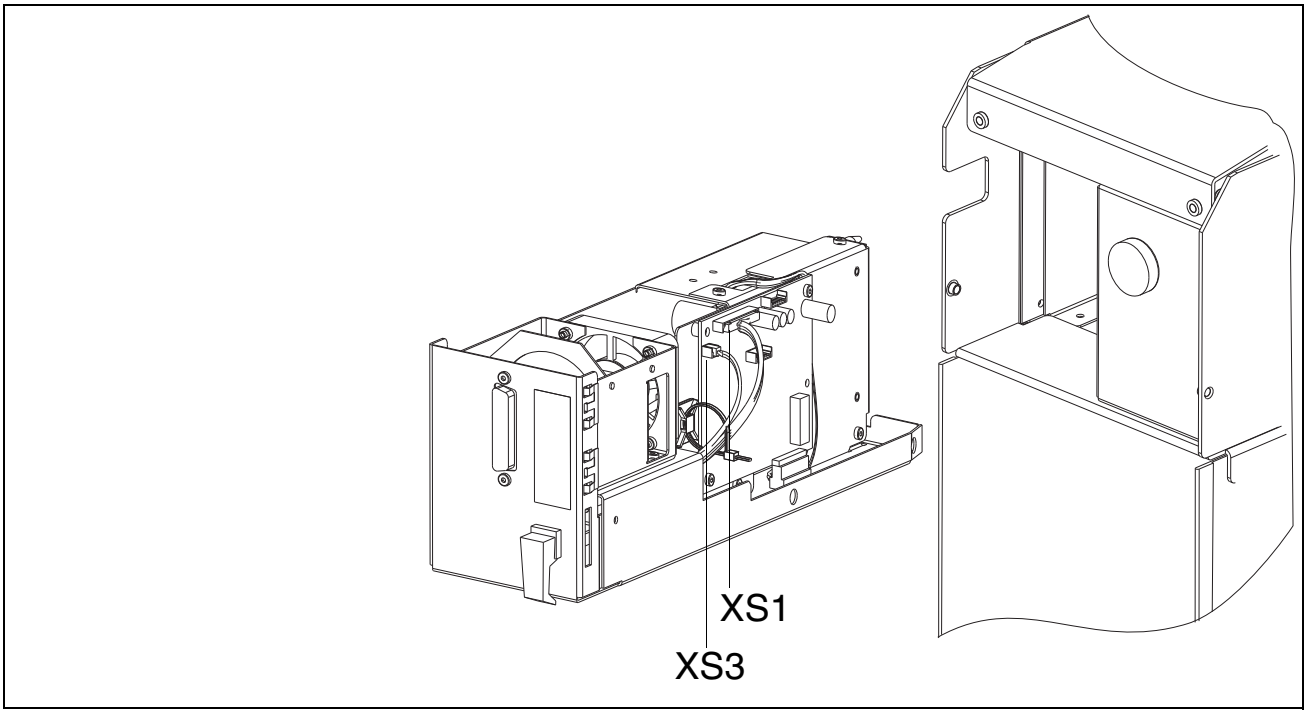

To replace the board on the Sirocam power supply unit, follow the procedure below:

1. Switch off the acquisition unit and disconnect its power plug.
2. Open the front door, pull apart the Velcro fastening and take off the door carefully.
3. Remove the cover plate.
4. Disconnect the Sirocam plug and place it to one side.
5. Pull out the lock and turn it 90° to the left (CCW).
6. Pull out the Sirocam module completely.
7. Remove the four screws on the shield plate for the two boards belonging to the Sirocam drawer.
8. Pull the shield plate out of the Sirocam drawer in the direction of the lamp module.
9. Disconnect the cable to the camera board and also the leads to the halogen lamp, thermostat and fan.
10. Remove the holding screws on the Sirocam power supply unit board.
11. Position the new Sirocam power supply unit board and screw it down firmly.

! ***CAUTION***

Attach the screws on the 25-pin plug connector first!

12. Connect the leads to the halogen lamp, thermostat, fan and camera board.

13. Position the shield plate with the attached boards and screw it down firmly.

14. Slide the Sirocam module into the acquisition unit.

! ***CAUTION***

Make sure that the plug at the end of the rear module is properly inserted into the socket on the matching component! It may be necessary to unscrew the matching component from the Sirocam lead and to reconnect it after sliding in the Sirocam module.

15. Turn the lock 90° to the right (CW) and then position the locking bar.

16. Connect the Sirocam plug and put on the cover plate.

17. Raise the front door, press the Velcro fastening together and close the door.

6.1.20 Sirocam lead L12

Part No.: 58 32 865

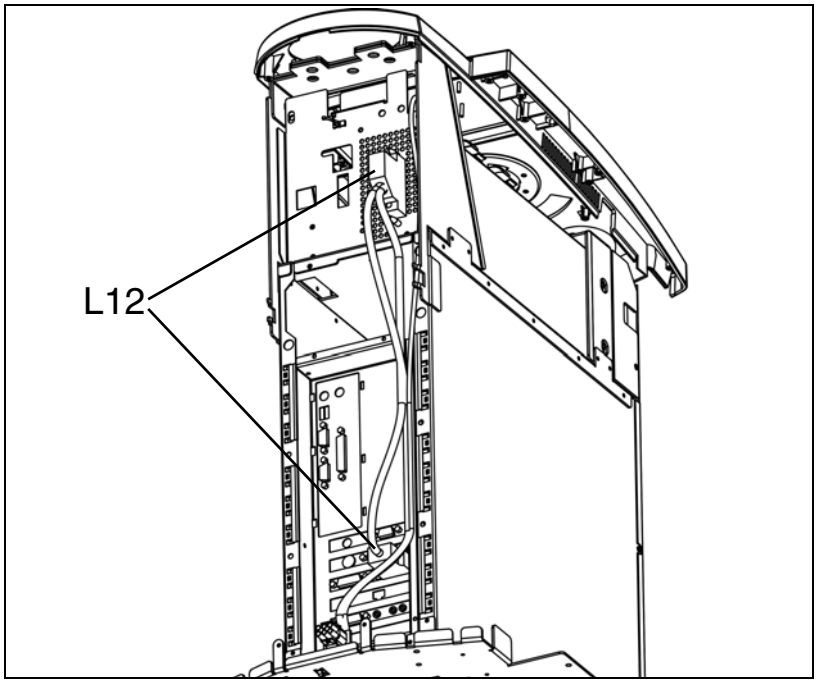

To replace the SIROCAM lead, follow the procedure below:

1. Switch off the acquisition unit and disconnect its power plug.
2. Remove the rear section.
3. Release and remove the Sirocam lead plug on the image acquisition card of the PC drawer and on the Sirocam drawer.
4. Undo the three screws on the cover plate and remove the plate.
5. Place the acquisition unit on its side.
6. Remove all the base plate holding screws.
7. Take out the base plate and place it to one side.
8. Disconnect the Sirocam lead at the Sirocam transformer isolating point and pull out the lead from the rear of the device.
9. Feed in the new lead from the rear and connect it to the transformer lead.
10. Position the base plate and screw down firmly.
11. Place the acquisition unit in an upright position.
12. Replace and screw down the cover plate. Then screw the grounding cable onto the cover plate. Make sure to use the special washer.
13. Connect the Sirocam lead to the image acquisition card in the PC drawer and screw it down.
14. Connect the Sirocam lead to the rear of the Sirocam module and screw it down firmly.

6.1.21 Complete light module unit

Part No.: 58 55 114

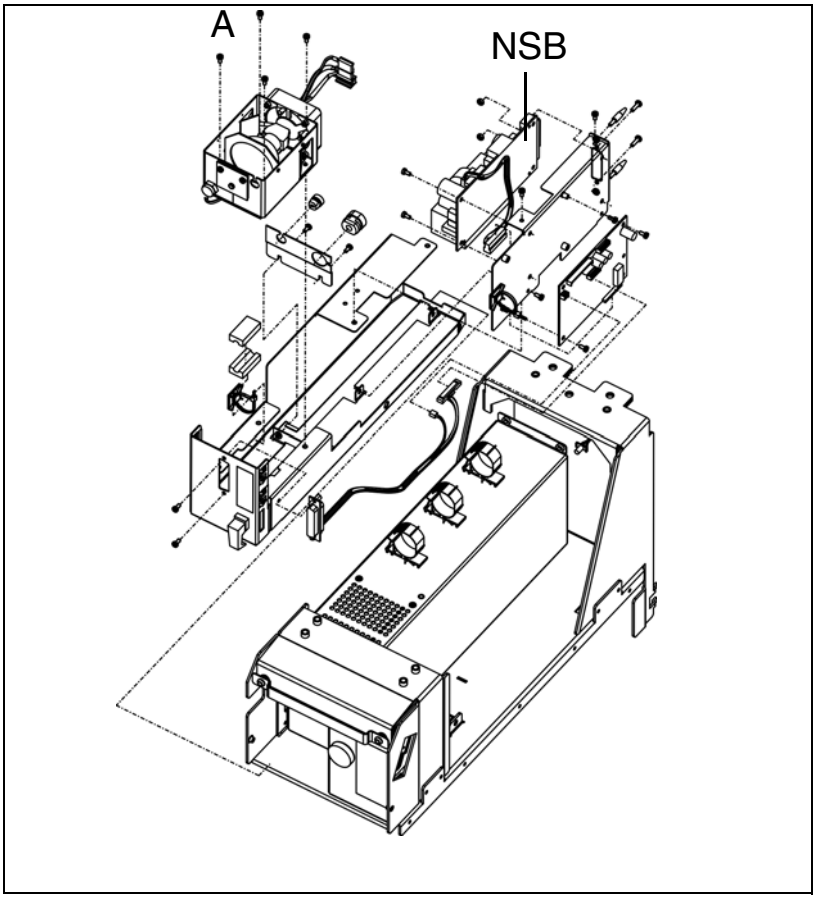

To replace the entire light module unit, follow the procedure below:

1. Switch off the acquisition unit and disconnect its power plug.
2. Open the front door, pull apart the Velcro fastening and take off the door carefully.
3. Remove the cover plate.
4. Disconnect the Sirocam plug and place it to one side.
5. Pull out the lock and turn it 90° to the left (CCW).
6. Pull out the Sirocam module completely.
7. Remove the four fixing screws **A** on the light module.
8. Disconnect the thermostat, fan and halogen lamp leads from the Sirocam (NSB) power supply board.
9. Gently withdraw the light module from the camera socket and remove it.
10. Position the new light module and screw it in place.

! ***CAUTION***

It is important to make sure that the fiber-optic rod inside the camera socket is not damaged!

11. Connect the thermostat, fan and halogen lamp leads to the Sirocam (NSB) power supply board.

12. Slide the Sirocam module into the acquisition unit.

! ***CAUTION***

Make sure that the plug at the rear end of the module is properly inserted into the socket on the matching component!

13. Turn the lock 90° to the right (CW) and then position the locking bar.

14. Connect the Sirocam plug and put on the cover plate.

15. Raise the front door, press the Velcro fastening together and close the door.

6.1.22 Complete camera socket

Part No.: 58 11 232

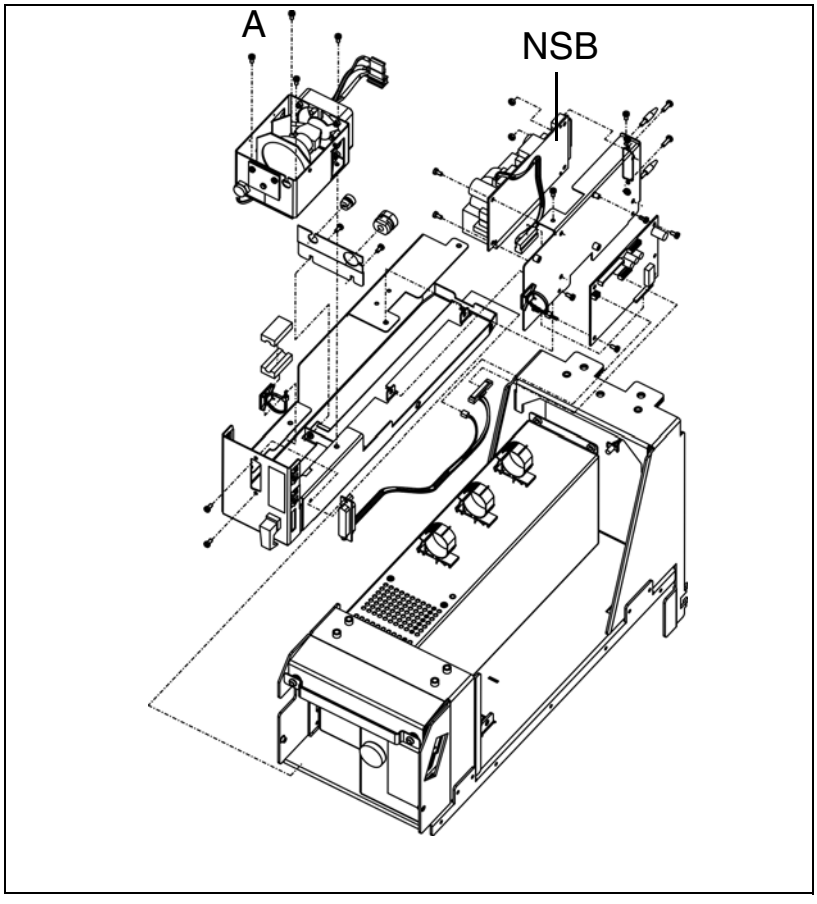

To replace the camera socket, follow the procedure below:

1. Switch off the acquisition unit and disconnect its power plug.
2. Open the front door, pull apart the Velcro fastening and take off the door carefully.
3. Remove the cover plate.
4. Disconnect the Sirocam plug and place it to one side.
5. Pull out the lock and turn it 90° to the left (CCW).
6. Pull out the Sirocam module completely.
7. Remove the four holding screws from the light module.
8. Disconnect the thermostat, fan and halogen lamp leads from the Sirocam power supply board.
9. Gently withdraw the light module from the camera socket and remove it.
10. Remove the camera socket fastening screws.
11. Completely disconnect the two plugs on the camera socket lead from the Cerec camera board.
12. Press the lead grommet out of the partition plate and take it off the lead.
13. Release the ferrite piece from the drawer plate and remove the entire camera socket lead.
14. Screw in the camera socket attached to the new lead.
15. Position and attach the ferrite piece belonging to the new lead.
16. Place the grommet on the lead and press it into the partition plate.
17. Connect the two plugs on the camera socket lead to the Cerec camera board.
18. Position the light module and screw it in place.

! ***CAUTION***

It is important to make sure that the fiber-optic rod inside the camera socket is not damaged!

19. Connect the thermostat, fan and halogen lamp leads to the Sirocam power supply board.
20. Slide the Sirocam module into the acquisition unit.

! ***CAUTION***

Make sure that the plug at the rear end of the module is properly inserted into the socket on the matching component!

21. Turn the lock 90° to the right (CW) and then position the locking bar.
22. Connect the Sirocam plug and put on the cover plate.
23. Raise the front door, press the Velcro fastening together and close the door.

6.1.23 Sirocam heater

Part No.: 58 32 907

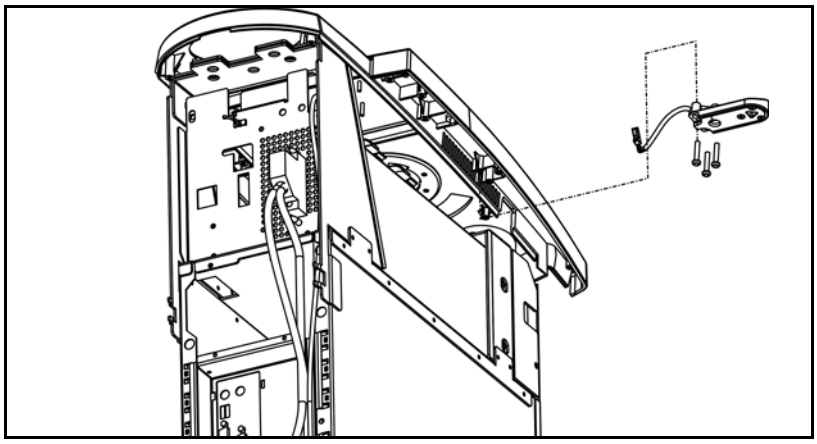

To replace the Sirocam heater, follow the procedure below:

1. Carry out Steps 1 to 9 in the instructions for replacing the Control unit.
2. Unscrew the heater from the control unit. Disconnect the cable from the floating isolating point and pull it out through the ventilation slot.
3. Feed the connecting cable for the new heater through the ventilation slot and connect the cable to the floating cable connector.
4. Screw the heater onto the control unit firmly.

! ***CAUTION***

It is important to make sure that the heater is positioned at right angles to the control unit. If necessary, readjust the heater after installing the control unit.

5. Install the control unit in accordance with the instructions for replacing the control unit.

6.1.24 EU radio interface

Part No.: 58 32 998
or DECT module, 1-piece. Rep. Part No.: 58 65 600

When replacing one or both of the DECT radio interfaces, make sure that linked radio interfaces are paired as specified in ‘5.3 Pairing the DECT-radio interface (EU)” .

6.1.25 Radio interface USA/Japan

Futaba radio interface

When replacing one or both of the Futaba radio interfaces, make sure that the settings are as specified in ‘5.5 Pairing the Futaba radio interface (USA/Japan)” .

Höft & Wessel radio interface

! ***CAUTION***

When replacing a Höft & Wessel radio interface module, always replace both modules at the same time. These modules can be mated only at the manufacturer’s plant.

1. Insert the module labeled **Acquisition Unit „FT“** in the acquisition unit.
2. Connect the module labeled **Milling Unit „PT“** to the milling unit.

6.1.26 DECT data transfer cable (L11/L21)

Part No.: 58 57 367

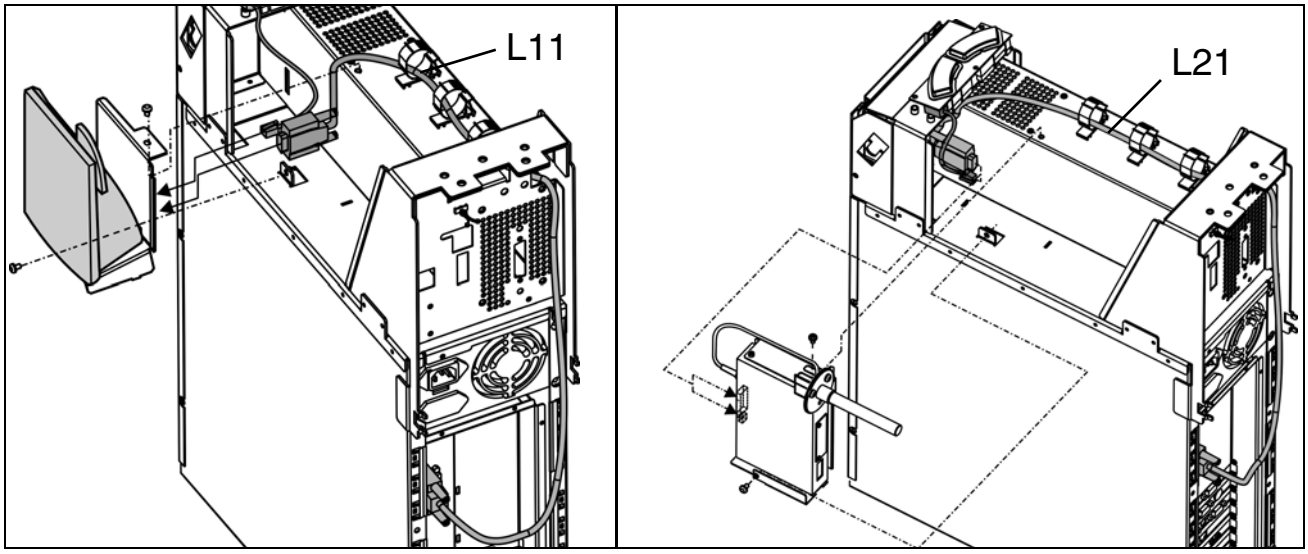

To replace the DECT data transfer cable, follow the procedure below:

1. Carry out Steps 1 to 9 in the instructions for replacing the Control unit.
2. Unscrew the radio module bracket.
3. Unscrew, disconnect and remove data transfer cable L11/L21.
4. Route, connect and screw on new L11/L21 data transfer cable as shown in the drawing.
5. Screw the radio module bracket back on.
6. Install the control unit by following the instructions for replacing the control unit.

6.1.27 XAB IO

Spare Part No.: 51 68 427
Rep. Part No.: 51 68 435

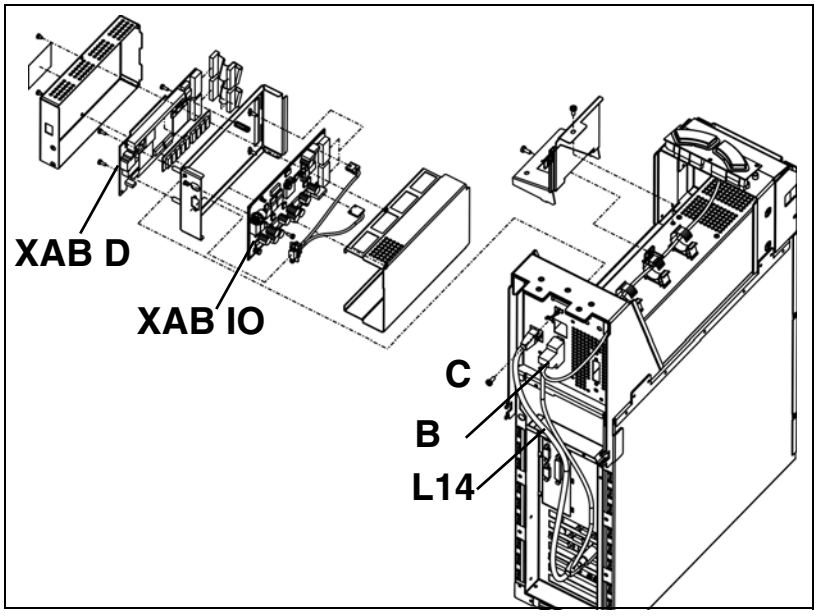

To replace the XAB IO, follow the procedure below:

1. Carry out Steps 1 to 9 in the instructions for replacing the Control unit.
2. Disconnect plug of network lead L14. Unscrew and remove plug **B**.
3. Unscrew the radio module bracket.
4. Remove screw **C** and take out the X-ray module.
5. Unscrew the 2 screws on the X-ray module and take off the cover panels.
6. Disconnect all plugs from the XAB IO PC board and unscrew the board.
7. Screw on the new **XAB IO** PC board and reconnect the plugs previously disconnected.
8. Screw the cover panels back on.
9. Insert the X-ray module and attach with screw **C** and the radio module bracket.
10. Reconnect plug **B** and screw it on firmly. Connect plug of network lead L14.

6.1.28 XAB D

Spare Part No.: 51 68 443
Rep. Part No.: 51 68 450

To replace the XAB D:

1. Carry out Steps 1 to 5 in the instructions for replacing the XAB IO.
2. Disconnect all plugs from the XAB D board and unscrew the board.
3. Screw on the new **XAB D** board and reconnect the plugs previously disconnected.
4. Carry out Steps 8 to 10 in the instructions for replacing the XAB IO.

6.1.29 Internal X-ray data transfer cable (L13)

Part No.: 58 32 840

To replace the X-ray data transfer cable, follow the procedure below:

1. Carry out Steps 1 to 5 in the instructions for replacing the XAB IO.
2. Disconnect all plugs from the XAB IO board and take out data transfer cable **L13**.
3. Insert the new data transfer cable **L13** and reconnect the plugs previously disconnected.
4. Carry out Steps 8 to 10 in the instructions for replacing the XAB IO.

6.1.30 External interface

Part No.: 58 57 375

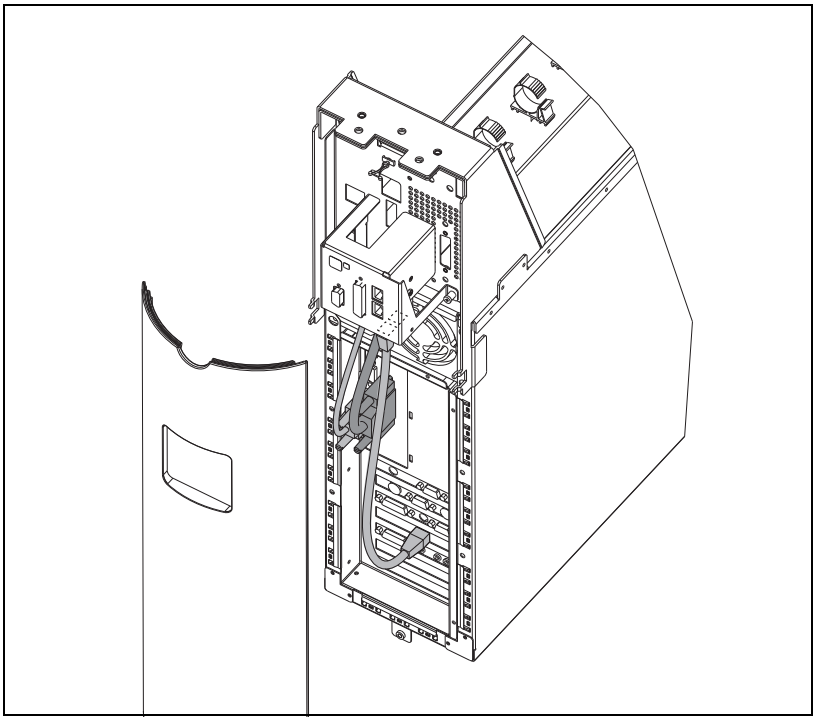

To replace the external interface, follow the procedure below:

1. Switch off the acquisition unit and disconnect its power plug.
2. Remove the rear section.
3. Unscrew and remove all the plugs on the external interface.
4. Unscrew the external interface (3 screws) and screw on the new external interface.
5. Reconnect the plugs previously disconnected and screw them on firmly.
6. Install the rear section.

6.2 Mechanical components

! ***CAUTION***

Disconnect the line power supply BEFORE replacing any parts.

6.2.1 Front flap

Complete front flap, Part No.: 58 10 762

Front flap, Part No.: 58 10 838

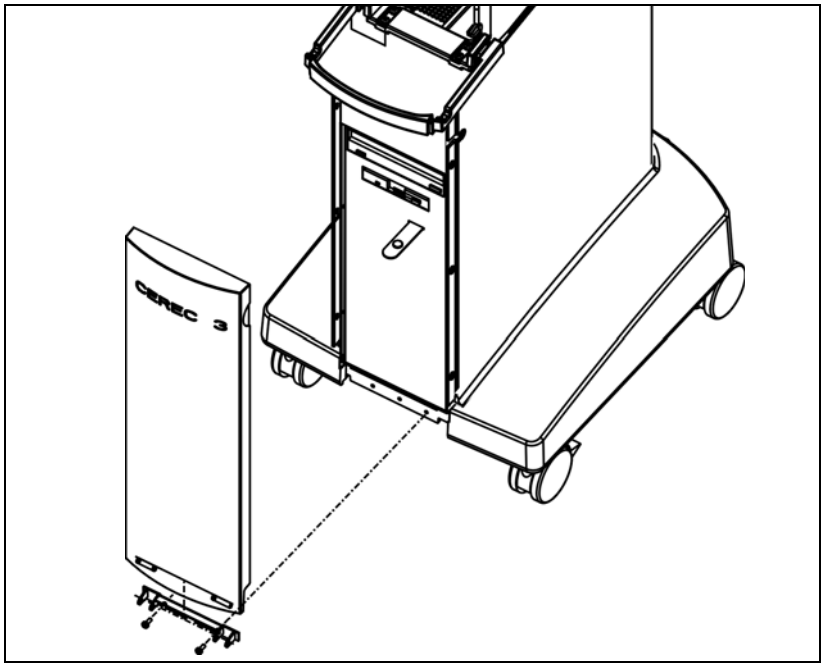

1. Swing the pedal down.
2. Loosen the L/R screws on the door support (screws need not be unscrewed completely).
3. Turn the front flap together with the door support and remove both.
4. To install, carry out the same steps in reverse order.
5. Door adjustment:
   Adjust the gap between the control unit and the door to approx. 1.5 - 2 mm.
   Tighten the L/R screws firmly.
6. It must be possible to close the door without scraping on the left or right.
   Any scraping can be corrected by loosening one of the fastening screws.

6.2.2 Side section

Side section - right, Part No.: 58 10 812

Side section - left, Part No.: 58 10 804

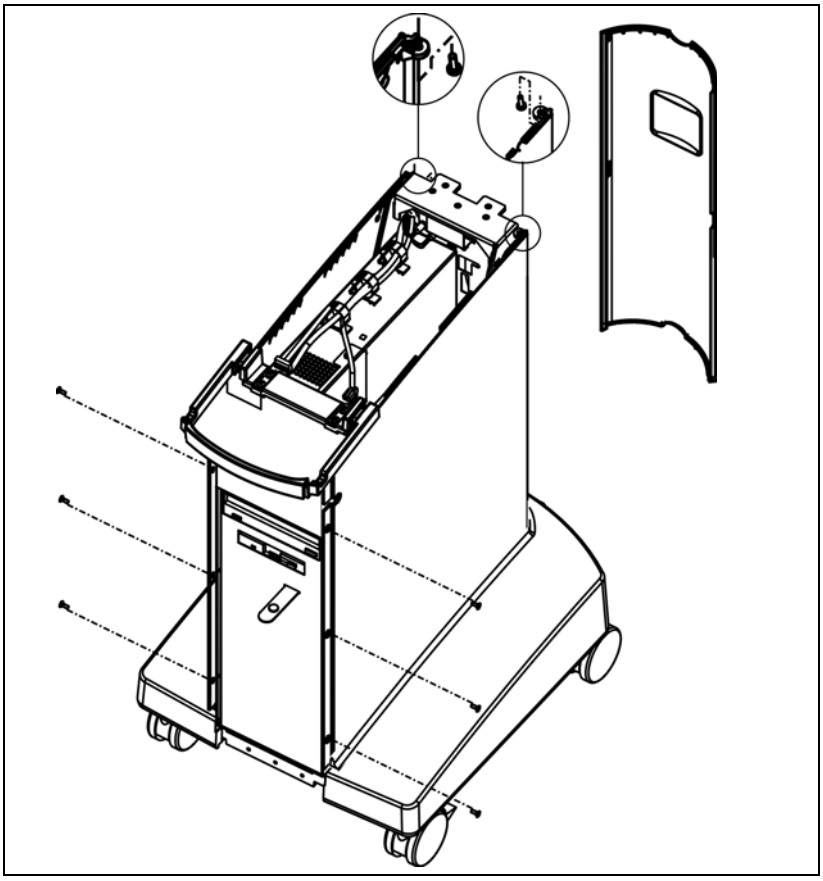

1. Take off the rear section.
2. Remove the top rear screw on the control unit.
3. Remove the 3 screws on the front.
4. Slide the side section out towards the rear.

6.2.3 Attaching the rear section

Part no.: 58 55 049

1. Remove the leads from the external interface.
2. To remove the rear section, place a finger or thumb in the top cut-away, press downwards and pull back.
3. Place your thumb in the top cut-away. Using your hand, guide the lower section of the back into the side sections and push down, turning the rear section towards the control unit.
4. Push the lower bolts down and attach the rear section to the control unit.

6.2.4 Unit base

Part No.: 58 10 952

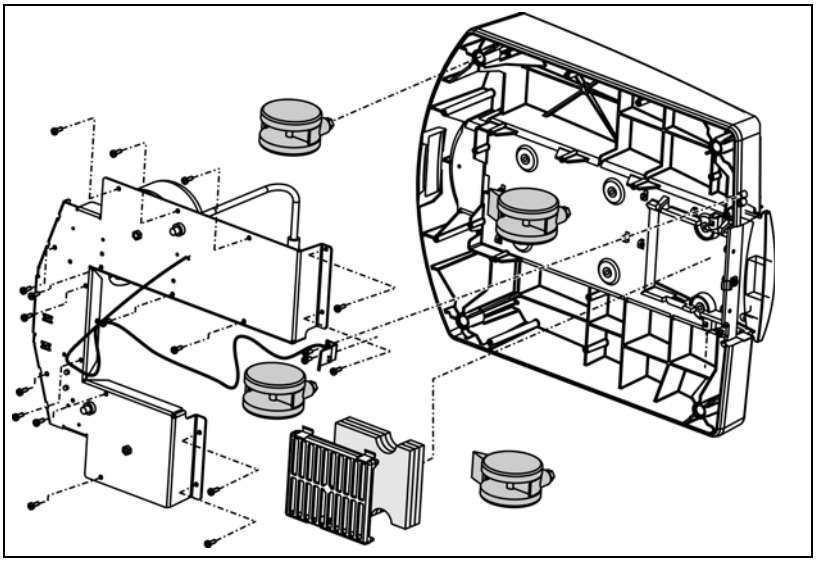

1. Remove the Sirocam camera and unscrew the CEREC.
2. Take off the rear section, side sections and front flap.
3. Unscrew the cable grip at the rear of the base. Then loosen and disconnect all the leads coming from below.
4. Position the unit on its side. Place a support underneath the unit so that the base is not in contact with the floor.
5. Remove the 6 screws on the bottom and take off the base.
6. Install the rollers, power supply plate, microswitch, filter, filter cover etc. on the new base.
7. Install the base and make sure that there is an even gap between all sides of the base and the drawer plate.

6.2.5 Castors

Roller, Part No.: 41 82 395
Castor with parking brake, Part No.: 41 82 403

1. Place the unit on its side.
2. Replace defective castor with a replacement castor.

6.2.6 Filter mat

Part No.: 58 33 046

1. To remove the filter cover on the bottom side, place your hand under the right-hand side and press the locking hook.
2. Replace the old filter mats with new ones and insert them in the filter cover.
3. Attach the filter mats and the filter cover to the base and push up to lock in place.

6.2.7 Pedal (foot switch)

Part No.: 58 10 877

1. Swing the pedal down past the stop spring.
2. Bend the pedal to one side and then slide it out in the opposite direction.
3. Attach one side of the new pedal and attach the other side by bending its arm section.

6.2.8 CEREC bracket

Part No.: 58 10 069

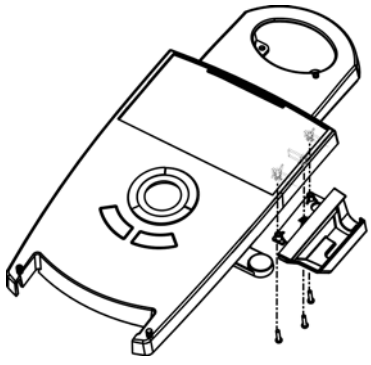

1. Remove the 3 bottom screws, take off the Cerec bracket and replace it with a new one.
2. Install the CEREC bracket using the 2 rear screws. Do not fully tighten the screws, since the bracket must still be moveable.
3. Press the bracket as firmly as possible against the control unit and tighten the two rear screws firmly.
4. Then insert the third screw and tighten so as to gently pretension the bracket against the control unit.

6.2.9 Sirocam bracket

Part No.: 58 11 216

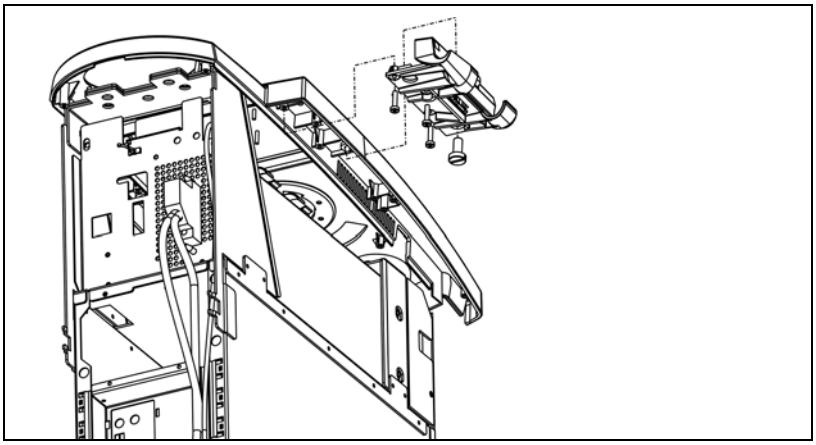

1. First, remove the 3 bottom screws together with the special screw. Then take off and replace the Sirocam bracket with a new one.
2. Install the Sirocam bracket using the 2 rear screws. Do not fully tighten the screws, since the bracket must still be moveable.
3. Press the bracket as firmly as possible against the control unit and tighten the two rear screws.
4. Then insert the third screw and tighten. The bracket is now held with light tension to the control unit.
5. Finally, insert the special screw until it grips. The screw must not be fully tightened (do not use a nut to attach the keyboard at this point).

6.2.10 Monitor adapter

Part No.: 58 10 242

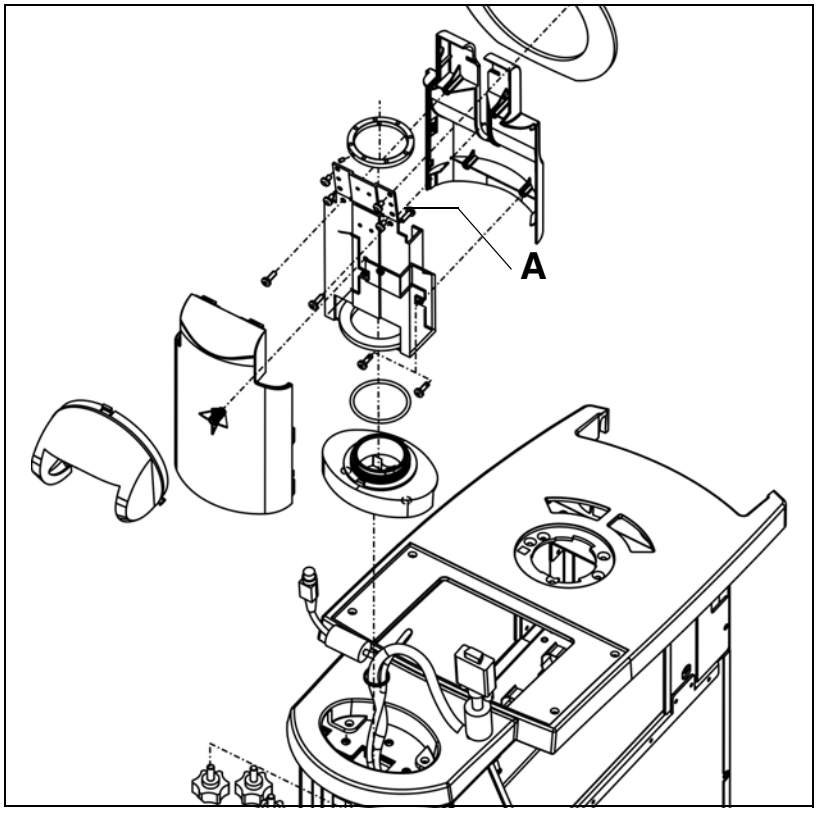

1. Remove the monitor as explained (‘6.1.13 LCD monitor unit”).
2. Undo screw **A** for the rear enclosure of the monitor stand by inserting a tool in the slot on the monitor front panel.
3. At a height of approx. 5cm, press the rear enclosure of the monitor stand together with one hand and remove it from the rear (if necessary, this can be made easier by inserting a screwdriver into the slot and pressing against the top of the screw hole).
4. A special tool is now used to remove the monitor nut and replace the monitor adapter.
5. Install the new monitor adapter. Do not fully tighten the monitor nut. The adapter must still be able to rotate without any play.
6. Clip the monitor enclosure into place and attach the screws.
7. Install the monitor as explained in (‘6.1.13 LCD monitor unit”).

6.2.11 Monitor support, complete

Part No.: 58 33 079

1. Remove the monitor rear panel as explained in ‘6.2.10 Monitor adapter” .
2. Remove the 4 screws holding the monitor front panel as well as the 4 screws holding the LCD monitor.
3. A special tool is now used to remove the monitor nut and replace the monitor support.
4. Install in accordance with the above instructions.

6.2.12 Monitor nut

Part No.: 58 32 931

Refer to ‘6.2.10 Monitor adapter” .

6.2.13 Monitor panels

Monitor panel - front, Part No.: 5811265

Monitor panel - rear, Part No.: 5811273

Refer to ‘6.2.10 Monitor adapter” and ‘6.2.11 Monitor support, complete” .

6.2.14 DECT holder

Part No.: 58 10 309

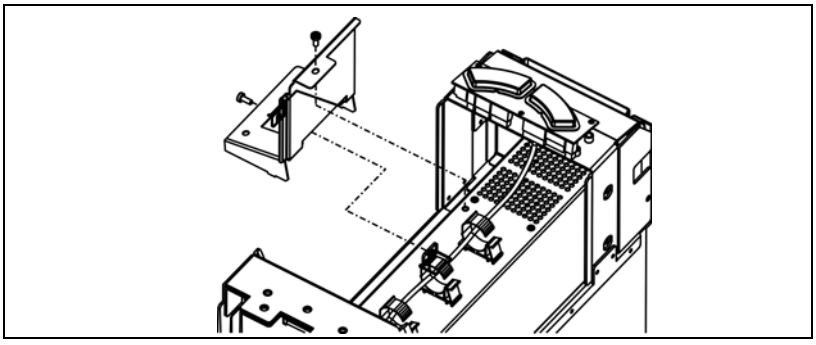

1. Remove the left and right side sections and the rear section.
2. Remove control unit. Undo the two DECT holder screws
3. To replace and install the radio interface, repeat these steps in reverse order.

6.2.15 Plug-in board

Part No.: 58 06 885

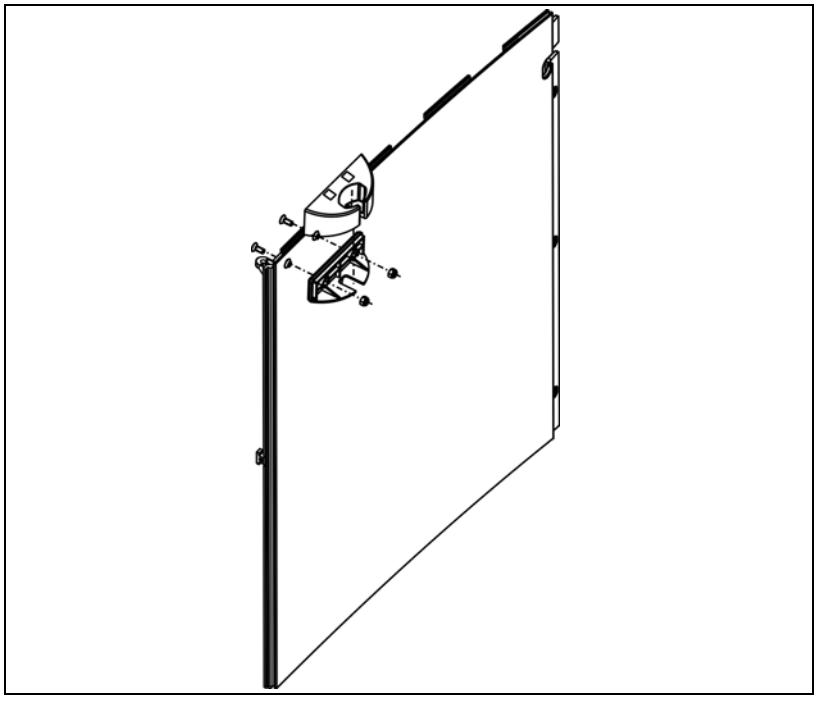

1. Remove the back section and the left side section (front view).
2. The two stamped indents on the side section can be punched out using a screwdriver. The existing holes can be used for installing replacement parts.

sirona
The Dental Company

7 Milling Unit: Repairs

CEREC 3

Milling Unit: Repairs

List of Contents

7.1 Milling Unit: General Activities 7-3
7.2 Replacing the Scanner 7-5
7.3 Replacing the Drive and/or Motor 7-11
7.4 Checking / Adjusting Stop positions 7-13
7.5 Stepping Motors: Replacing / Adjustment 7-15

7.1 Milling Unit: General Activities

7.1.1 Removing the front panel

1. Pull out the tank.
2. Loosen the two side screws.
3. Open the milling chamber door slightly (catch must be open).
4. Pull out the front panel approx. 10 cm.
5. Disconnect the cables (door lock, sealed keypad).
6. Remove the front panel completely, pressing the tank connector upwards.

7.1.2 Installing the front panel

1. Close the milling chamber door.
2. Slide in the front panel slightly while raising the tank connector.
3. Connect the cables (door lock, sealed keypad).
4. Slide in the front panel completely, opening the milling chamber door slightly.

! ***CAUTION***

Do not insert the front panel into the seal.

5. Lift the front panel over the seal and screw it on at the side again.
6. Insert the tank.

7.2 Replacing the Scanner

7.2.1 Safety

Scanning Milling Unit

The unit corresponds to a CLASS 1 LASER PRODUCT.

The scanner contains a CLASS 2 laser source.

! ***CAUTION***

– Laser radiation
– Do not stare into the beam
– Class 2 Laser Product

! ***CAUTION***

–The laser beam emerges at right angles to the window of the scanner!
– Power:< 1mW
– Wave length:670nm
– Aperture angle:> 10mrad

! ***CAUTION***

Check the scanner for visible damage before every scanning operation!

! ***CAUTION***

The scanner may be installed and removed only by service engineers.

! ***CAUTION***

Before opening the milling unit, switch the unit OFF and disconnect it from the power supply.

! ***CAUTION***

UNDER NO CIRCUMSTANCES may the plugs of the scanner be plugged in before the scanner is installed.

7.2.2 Preparations

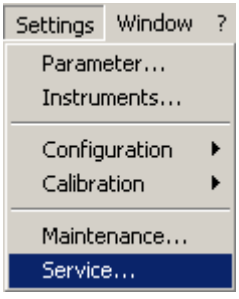

1. In the ***Settings*** menu item call up the ***Service*** menu item.
2. Click on the ***Yes*** button in the two following windows.

   See “Password protection” on page 2 - 5.

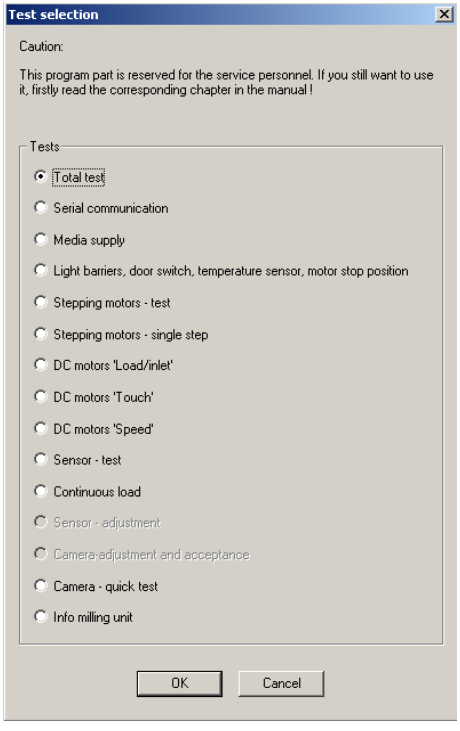

3. In the ***Test selection*** window select the ***Light barriers, …*** subitem and confirm with ***OK***.

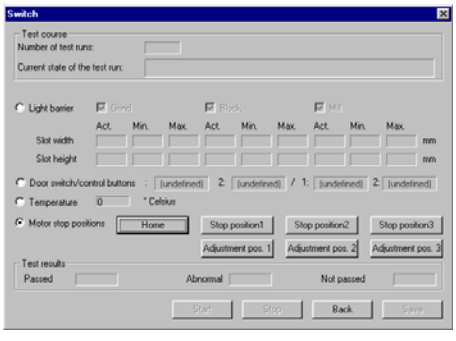

4. In the ***Switch*** window select the ***Motor stop positions*** subitem and click on ***Home***.

The unit moves into the starting position.

! CAUTION

Switch the unit OFF and disconnect it from the power supply.

i NOTE

Remove the milling burrs and ceramic block (if present).

7.2.3 Removing the Scanner

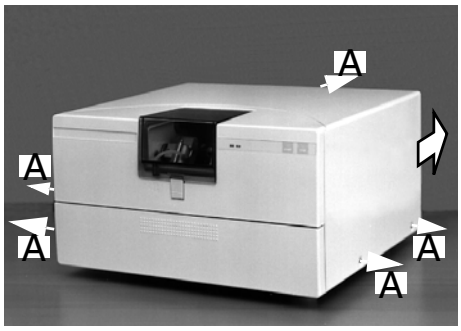

1. Unscrew 5 screws **A** from the cover and remove the cover to the rear.

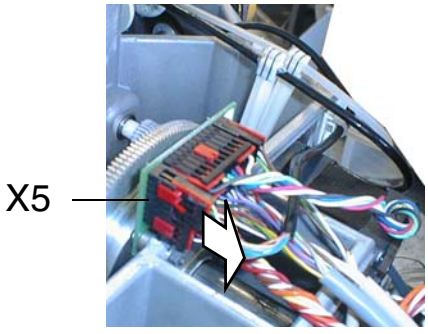

2. Pull off plug **X5**.
   Cut through the two cable ties on the scanner cable.

3. Turn the left drive by hand, unscrew the 2 screws and detach the scanner from the carrier.

4. Pry out the sealing collar with the block changing tool.
   Pull the two plugs through the hole one after the other and remove the scanner with cable.

7.2.4 Installing a New Scanner

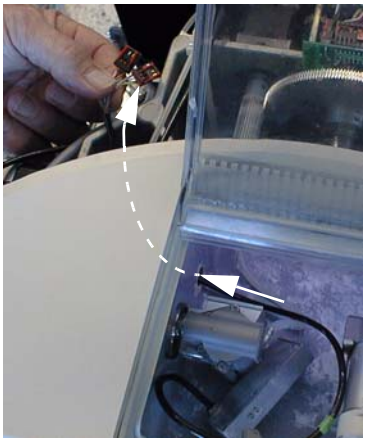

1. Push both plugs of the scanner one after the other through the hole and pull out cable in the cast part.

2. First insert the sealing collar below and then press with the block changing tool until the collar is fully flush with the milling chamber wall.

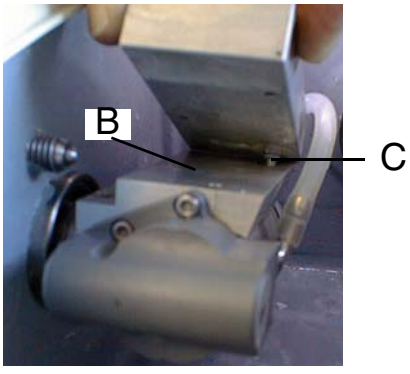

! ***CAUTION***

*The surface **B** must be free of impurities.*

3. Insert scanner locating pin **C** and loosely fasten the scanner with 2 screws.

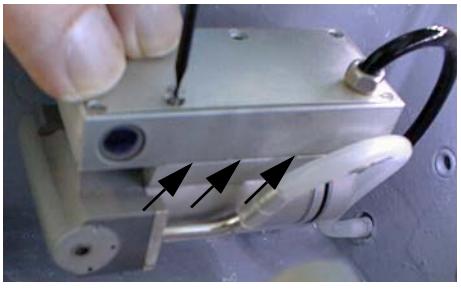

4. Align the scanner parallel to the carrier and tighten both screws.

5. Turn the drive by hand up to the stops and make sure it moves freely.

! ***CAUTION***

The block axle must not come into contact with the scanner cable.
The scanner cable must lie above the water hose.

6. Fasten the scanner cable with the cable tie on the adhesive base so that the cable curves away from the sealing collar and does not lie in the region of the gearwheels.
   Cut off excess length of the cable tie.

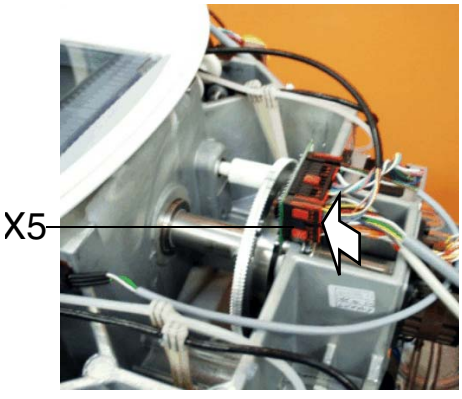

7. Run scanner cable as shown and plug both plugs onto X5 (pay attention to coding).
8. Slightly raise the cover at the back, mount it and fasten with 5 screws.

7.2.5 Functional Test

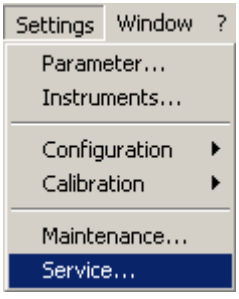

1. In the ***Settings*** menu call up the ***Service*** menu item.
2. Click on the ***Yes*** button in the two following windows.

   See “Password protection” on page 2 - 5.
3. Connect the unit to the power line and switch it ON.
4. Perform calibration. See Operating Instructions for the Milling Unit, Calibrating the Scanner.

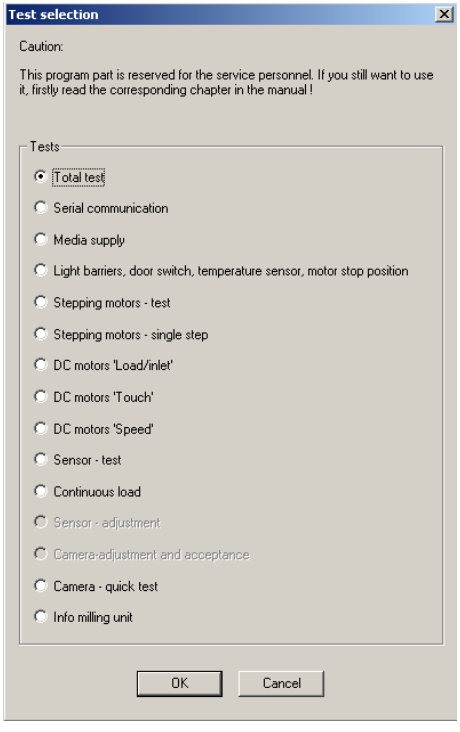

5. In the ***Test selection*** window select the ***Sensor test (Scanner test)*** subitem and confirm with ***OK***.

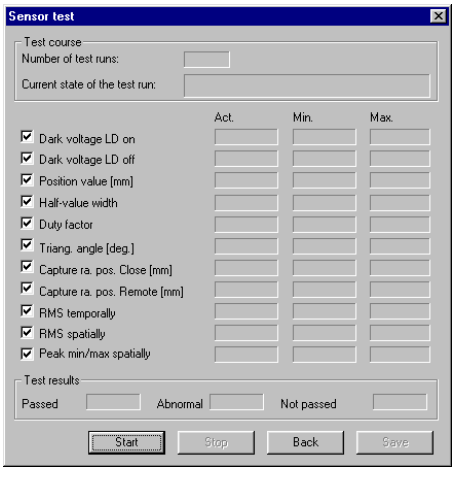

6. In the ***Sensor test (Scanner test)*** window click on the ***Start*** button. When approximately 10 test runs have been made, click on the ***Stop*** button.

All fields must have a green background.

7.3 Replacing the Drive and/or Motor

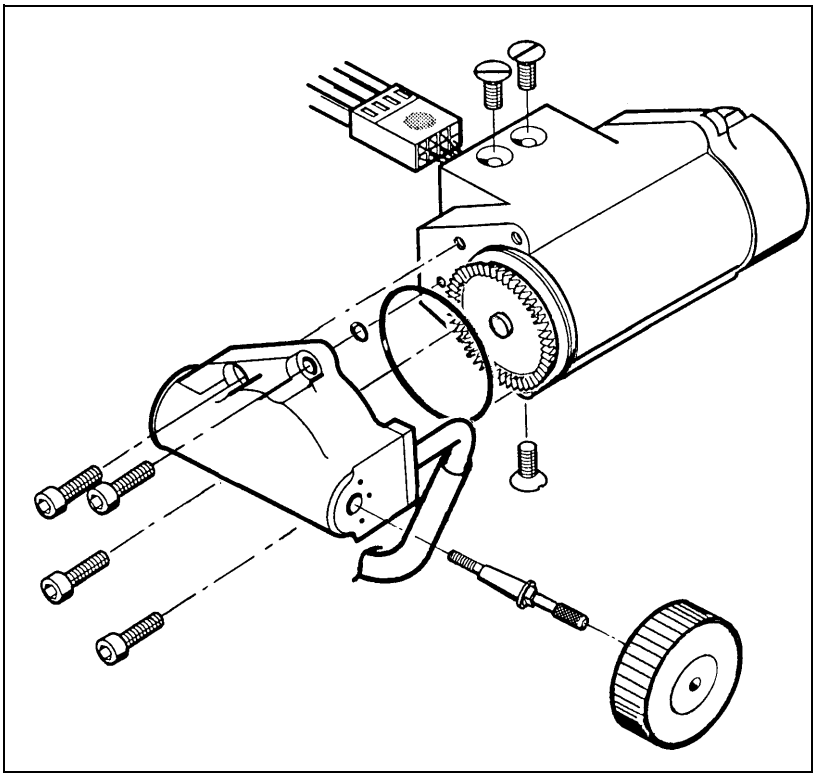

1. Change the drive/motor as shown in the diagram.

! ***CAUTION***

Pay attention to the enclosed data sheet.

2. Check stop positions. Adjust if necessary. Refer to (☞ see page 7 - 13).

Running up the motor / drive

3. Select /Service/Test selection/**DC - motors "Inlet/Load"** (☞ see page 2 - 16).

i ***NOTE***

Motor ½ = DC milling motor;
Motor 3 = DC sensor motor.

4. Allow the motor to run until the speed indicator has reached at least the yellow level (the indicator is usually red at the start of the run-up time).

Calibrating the milling unit

5. Refer to the instructions for using the milling unit.

Milling test pieces

6. Load restoration: Select Cerec - Test, Patient/***Mini Lego Cube***.
7. Mill test pieces.

Motor / drive testing

8. Select Settings/Service/Test selection/**DC - Motors "Speed"**(☞ see page 2 - 18).
9. Select Settings/Service/Test selection/**DC - Motors "Touch"** (☞ see page 2 - 16).

If not all the displays have a green background, mill another test piece and repeat the test.

7.4 Checking / Adjusting Stop positions

When carrying out some servicing tasks, it may be necessary to adjust the stop positions on milling units, especially when replacing:

- Drive units
- DC motors
- Light barriers

7.4.1 Checking the stop position

1. Select Settings/Service/Test selection/**Light barriers** , **Motor stop positions**
   (☝ see page 2 - 13).
2. Call up **Stop position 1** or **3** of the corresponding motor.
3. Check whether the installed grinder can be removed and screwed back into place with the grinder changer (see operating instructions for the milling unit and changing grinders).

If this is not the case, the stop position must be adjusted.

7.4.2 Adjusting the stop position

1. Switch off the device.
2. Remove the hood.
3. Take off the front panel (☝ see page 7 - 3).

Adjustment

! ***CAUTION***

The connector is still energized.

4. Switch on the device.
5. Start the CEREC 3 program.
6. Simulate door locking using a shorting plug.
7. Call up stop position adjustment by selecting: Settings/Service/Test selection/**Light barriers** , **Motor stop positions**
   (☝ see page 2 - 13).
8. Call up **Stop position 1** or **3** of the corresponding motor.

9. Adjust screw **A** using an Allen key.
(latching button on gear box flush with gear box cover).

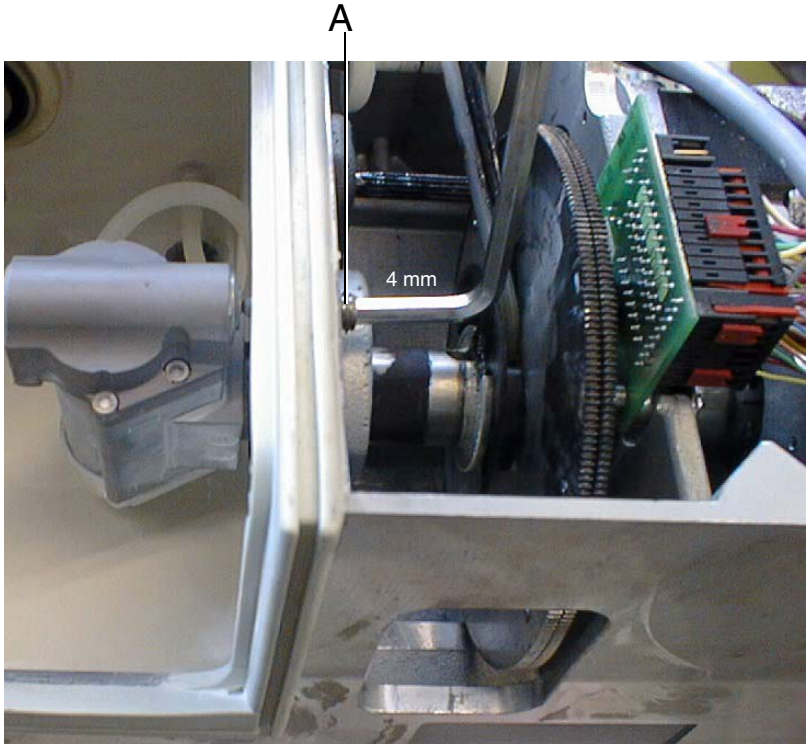

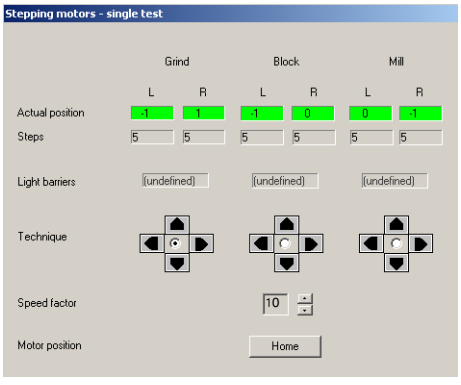

10. Call the test "**Stepping Motors - Single Step**" (☞ see page 2 - 15):
Settings/Service/Test selection.
Set the Speed factor to "***10***".

11. Check to make sure that the locking button moves past the latching button without contacting it when the motors run (***Grind*** for stop position 3, ***Mill*** for stop position 1).

! ***CAUTION***

Do not reach into the milling machine or leave any tools inside.

After carrying out the adjustments, recheck the stop position
(☞ see page 7 - 13).

12. Switch off the unit. Disconnect from the line power supply!

13. Remove the shorting plug from the door lock.

14. Install the front panel (☞ see page 7 - 3).

15. Attach the hood.

7.5 Stepping Motors: Replacing / Adjustment

1. Switch off the unit. Disconnect from the line power supply!
2. Remove the hood.
3. Take off the front panel (☞ see page 7 - 3).

When working on the block axis

4. Unscrew and remove the 4 screws on the milling machine mounting.
5. If necessary remove the cable ties and hoses to enable the milling machine to be turned in order to provide access to the motor screws on the block axle.

On all motors

6. Disconnect the cable for the corresponding motor.
7. Remove the screws from the corresponding motor.

On longitudinally mounted motors

8. Remove the motor with the spindle.
9. Release the clamping flange.

On torque motors

10. Pull out the motor with the shaft.
11. Release the clamping flange.

To replace a motor

12. Remove the motor and install a new one.

Clamping flange / Spindle adjustment

13. Adjust the spindle / shaft so that it is kept at a distance of max. 0.5 mm from the motor housing.

! CAUTION

The spindle must not touch the motor housing.

14. Adjust the clamping flange so that it is kept at a distance of max. 0.5mm from the motor housing.

! CAUTION

The spindle must not touch the motor housing.

On longitudinally mounted motors

15. Push the motor into position with the spindle.

On torque motors

16. Tension the cogwheels according to the markings (3 teeth on the block axle, 4 teeth on other axles) and fit the motor and shaft.

On all motors

17. Screw on the motor (must still be moveable).
18. Connect the cable for the corresponding motor.

! CAUTION

Make sure that the plugs are correctly positioned.

19. Simulate door locking using a shorting plug.

CAUTION

The connector is still energized.

20. Switch on the device.

21. Start the CEREC 3 program.

22. Select Settings/Service/Test selection/**Stepping motors** (☞ see page 2 - 13).

23. Select the corresponding motor and Stage 3.

CAUTION

Do not reach into the milling machine or leave any tools inside.

24. Gently tighten the screws while the motor is running.

25. If the corresponding display is green after another test run, finish tightening the screws.

26. Test the other motor on the same axle (Stage 3).

27. Readjust if necessary.

CAUTION

Switch off the unit! Disconnect from the line power supply!

28. Remove the shorting plug from the door lock.

When working on the block axle

29. Screw down the milling machine firmly (attach protective ground conductor!).

30. Replace cable ties and connect hoses if necessary.

31. Mount the front panel (☞ see page 7 - 3).

32. Attach the hood.

sirona
The Dental Company

8 Installing Software

CEREC 3

Installing Software

List of Contents

8.1 Acquisition Unit: Network Installation 8-3
8.2 How to install an MO drive..... 8-25

8.1 Acquisition Unit: Network Installation

The network installation is described using a direct network link via a Network Interface Card (NIC) **as an example**. The installation procedure for TCP/IP and NetBEUI protocols is described.

NOTE

All the settings shown here are only intended as examples!

Different settings must be used in other network environments! Contact your network administrator for further information.

- To carry out a network installation, select the network environment icon on your desktop and click the right mouse button.
- In the dialog box displayed (Fig. 8-1), select "Properties".

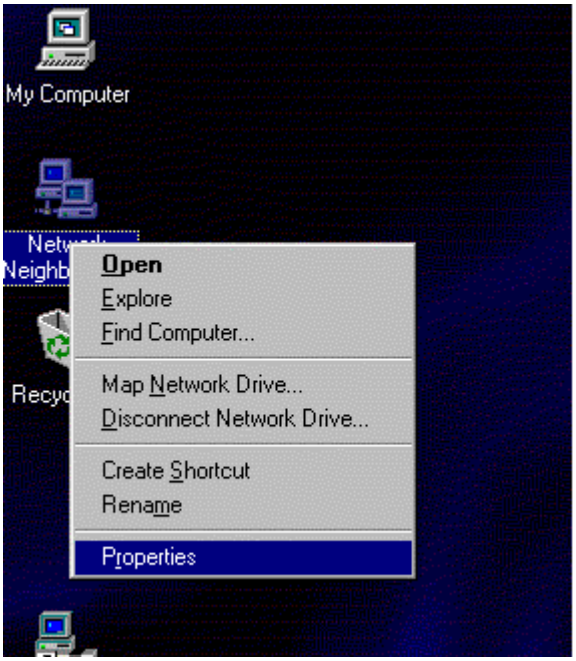

Fig. 8-1 Properties

- Confirm the "Network Configuration" dialog box (Fig. 8-2) by clicking "Yes".

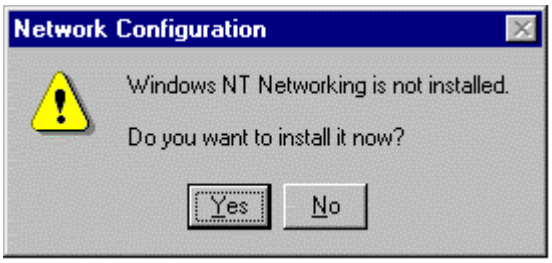

Fig. 8-2 Network Configuration

The "Network Setup Wizard" is activated.

▶ Select "Wired to the network" for a direct connection to the network (Fig. 8-3).

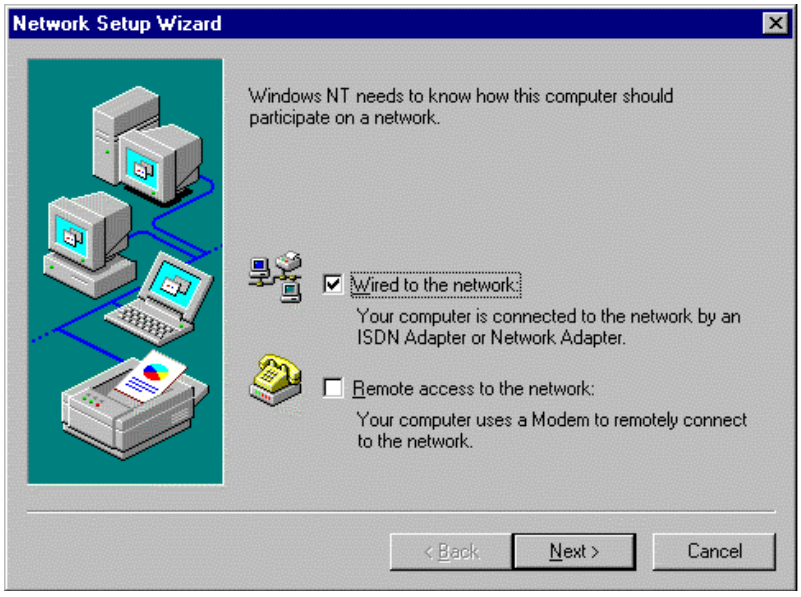

Fig. 8-3 Network Setup Wizard

▶ Confirm your selection with "Next".

The next dialog box is used to search for the network adapter (Fig. 8-4).

▶ The NIC drivers are stored on the hard disk drive in the acquisition unit. Here you must therefore choose "Select from list...".

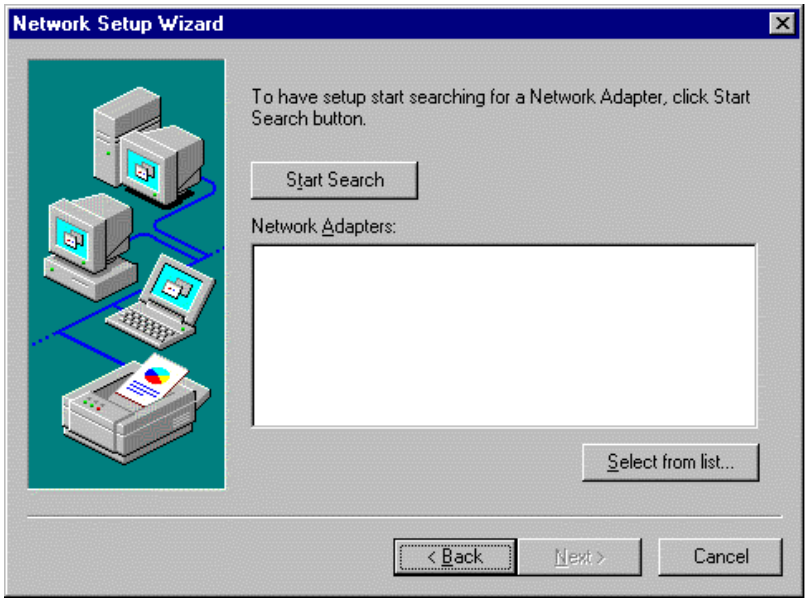

Fig. 8-4 Select from list

▶ In the "Select Network Adapter" dialog box: (Fig. 8-5), select "Have Disk" to install the drivers from your hard disk drive.

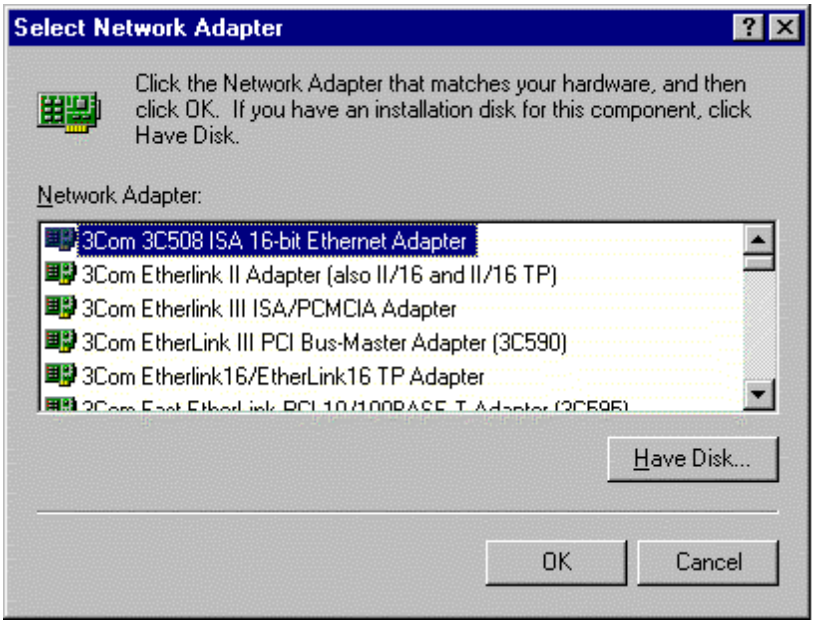

Fig. 8-5 Select Network Adapter: Network adapter

A dialog box appears for entering the path of your NIC drivers (Fig. 8-6).

▶ Enter the path for the driver data:
"C:\SIRONA\3COM\3C905CTX\DISK1".

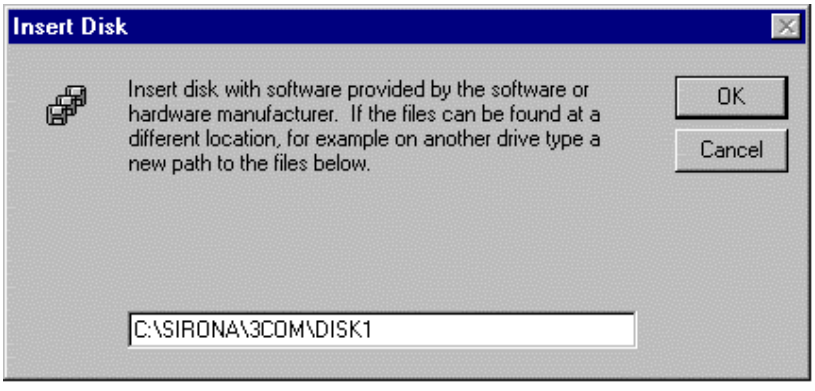

Fig. 8-6 Enter path

▶ Select "OK" to confirm.

▶ In the "Select OEM Option" dialog box, select " 3Com EtherLink PCI NIC" and confirm with "OK" (Fig. 8-7).

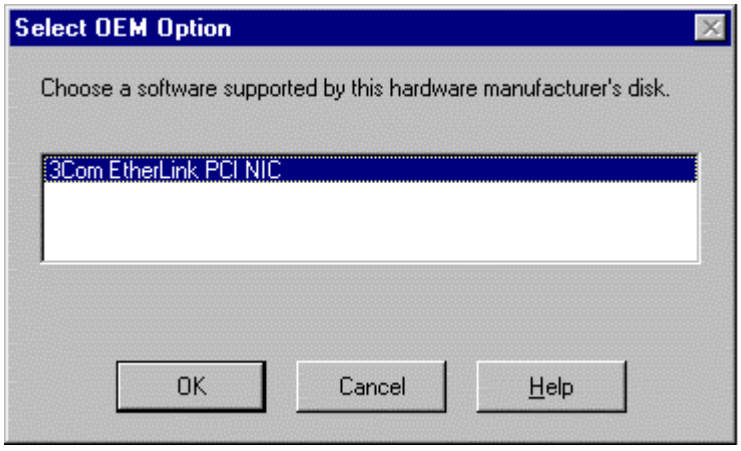

Fig. 8-7 Select OEM option

▶ In the "Network Setup wizard" dialog box, select the "3Com EtherLink PCI NIC" network adapter and confirm with "Next" (Fig. 8-8).

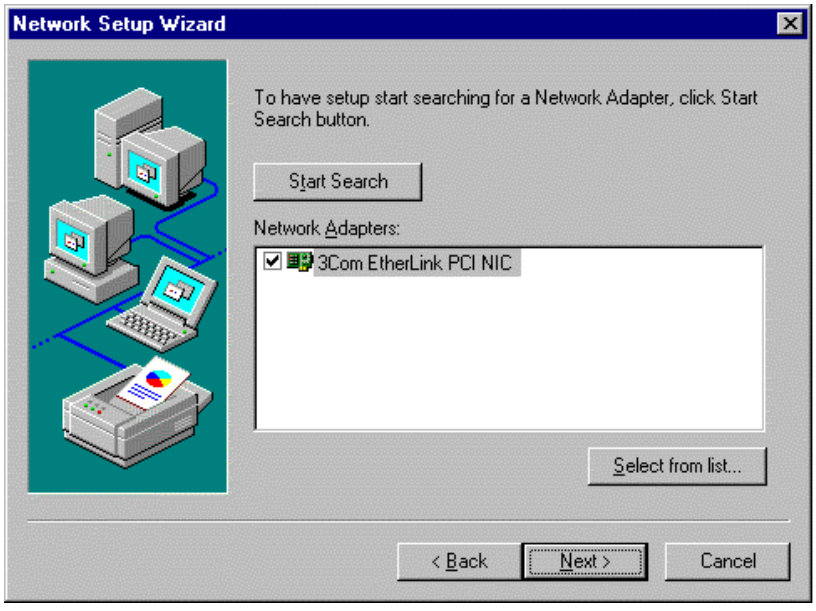

Fig. 8-8 Select network adapter

In the "Network Setup Wizard" dialog box (Fig. 8-9), you must now select the protocol to be installed.

▶ To install a network with a "NetBEUI" protocol, refer to point “Network Setup with NetBEUI Protocol” on page 8 - 15.

▶ For "TCP/IP"" networking, select the protocol and confirm with "Next" (Fig. 8-9).

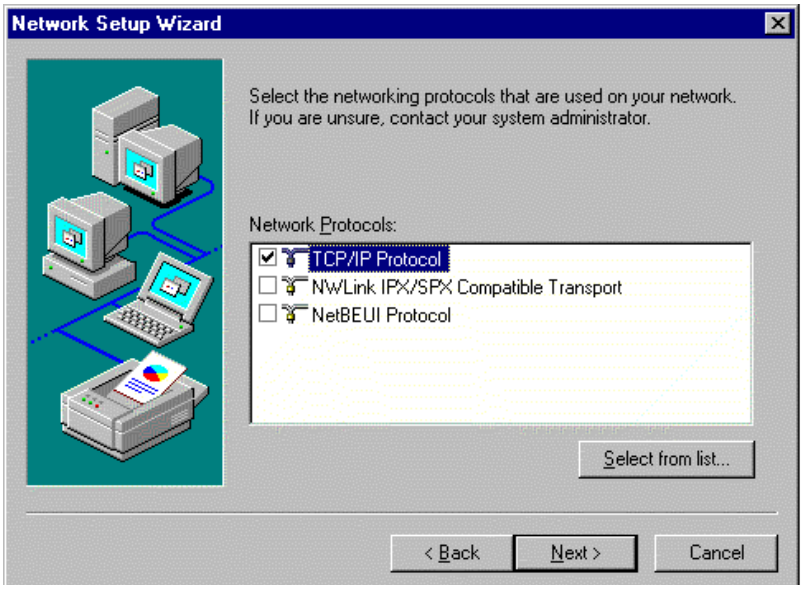

Fig. 8-9 Select protocol

8.1.1 Network installation with TCP/IP protocol

NOTE

All the settings shown here are only intended as examples!
Request the corresponding settings for your network environment from your network administrator.

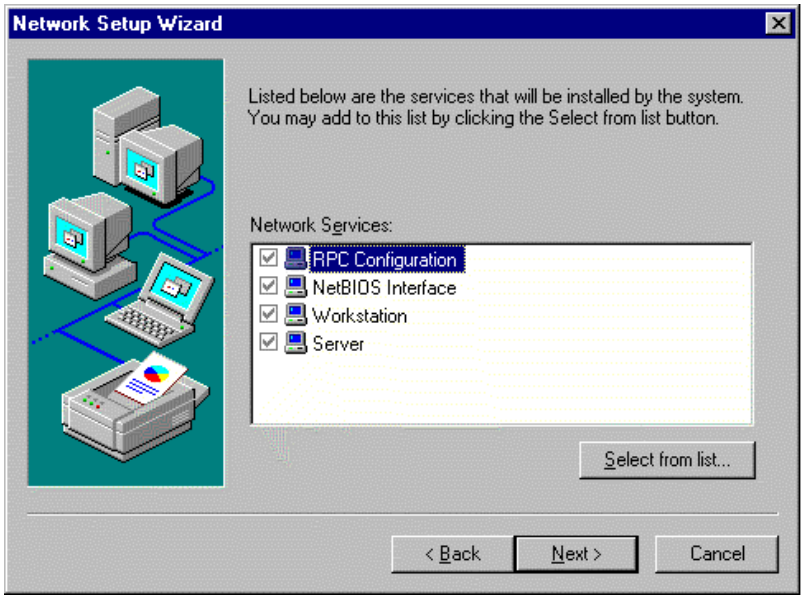

Fig. 8-10 Select Network Services

- Accept the selected Network Services and confirm with "Next" (Fig. 8-10).
- Confirm the following dialog box with "Next" (Fig. 8-11).

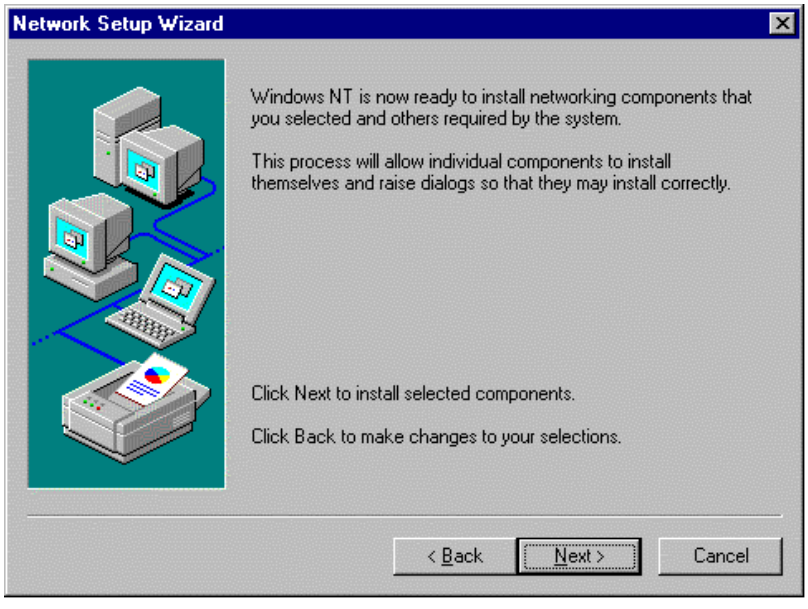

Fig. 8-11 Install components

▶ If you are prompted to enter path in the "Windows NT Setup" dialog box, enter the path for the "i386" directory in the Windows NT 4.0 workstation CD (Fig. 8-12).

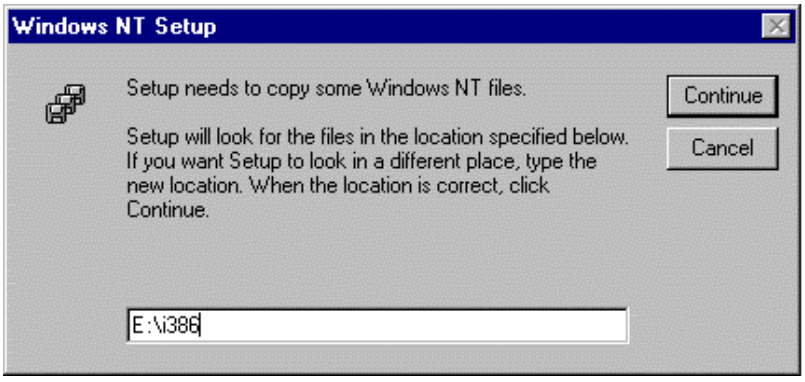

Fig. 8-12 Copy files

The files contained in the "i386" directory are copied onto your hard disk drive.

In the "TCP/IP-Setup" dialog box you are queried if you want to use the "DHCP Server".

NOTE

Contact your network administrator if you require further details on the DHCP Server.

▶ If your administrator has assigned you a specific TCP/IP address, select "No" in the dialog box (Fig. 8-13).
The installation shown here uses a specified TCP/IP address.

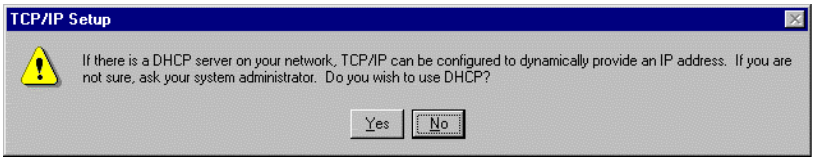

Fig. 8-13 TCP/IP setup

The network will now be installed.

Various settings must now be selected in the "Microsoft TCP/IP Properties" dialog box.

First, enter the IP and default gateway addresses and specify the Subnet Mask setting (Fig. 8-14).

NOTE

These address settings and the mask only apply to this example. Request the corresponding settings for your network environment from your network administrator!

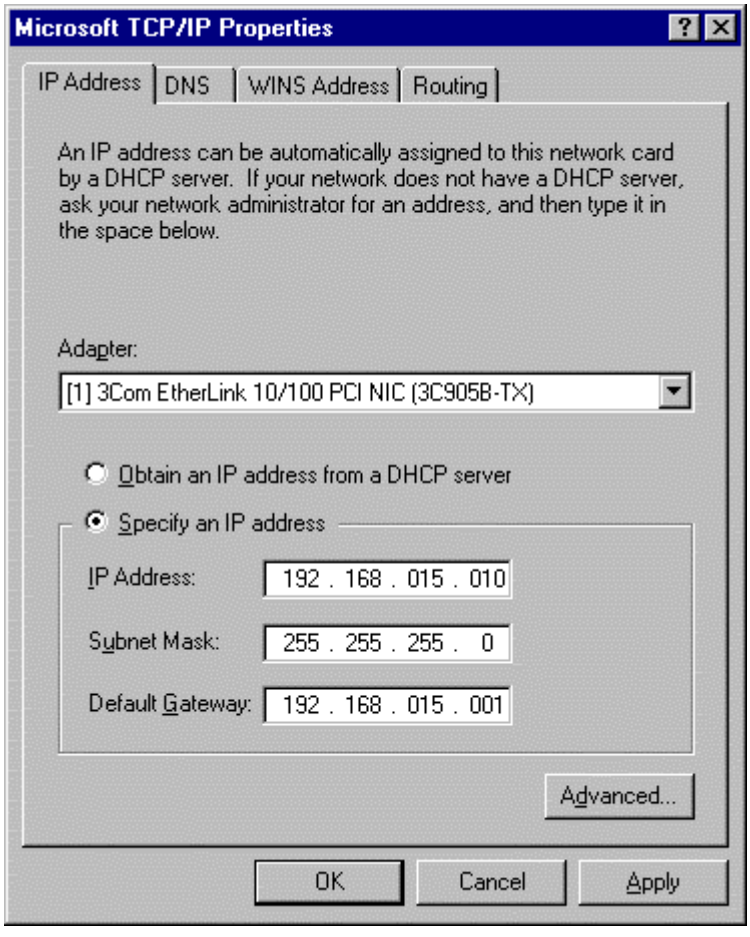

Fig. 8-14 IP address

Device type	TCP
Workstations	**192.168.15.10** to **192.168.15.99** (max. 89 PCs)

TCP/IP address allocation guidelines

Enter the following DNS data (Fig. 8-15):

NOTE

These settings only apply to this example.
Request the corresponding settings for your network environment from your network administrator!

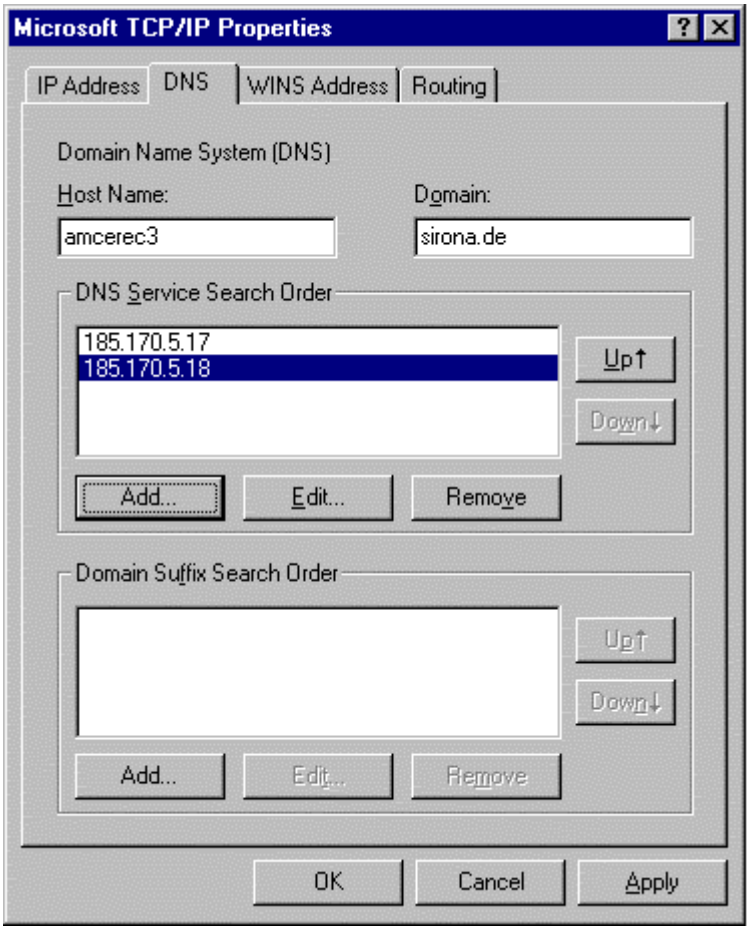

Fig. 8-15 DNS service

NOTE

In this example, no entries are made in the WINS address or routing!
Contact your network administrator if you require further details!

- In the dialog box referring to the missing WINS address, select "Yes" to confirm.
- No changes are made in the Network Linkings dialog box (Fig. 8-16). Select "Next" to confirm.

NOTE

Contact your network administrator if you require further details!

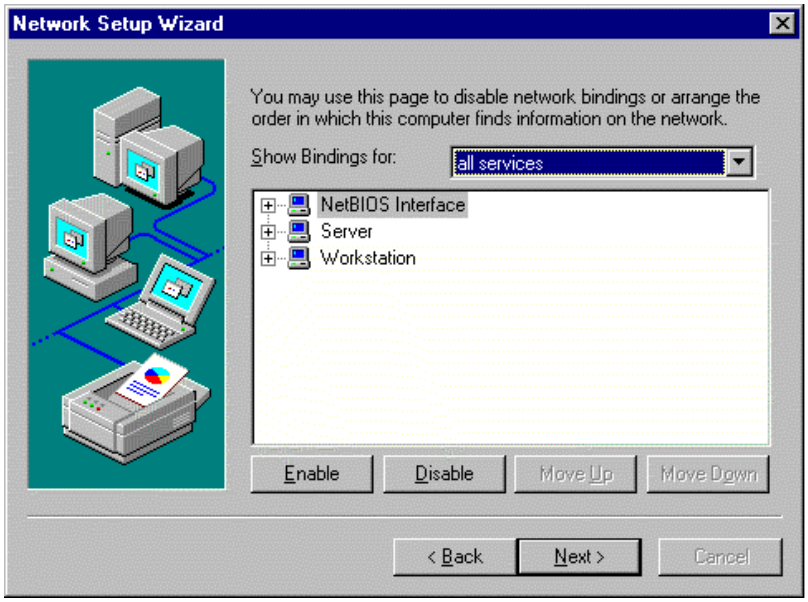

Fig. 8-16

▶ Select "Next" in the dialog box. Windows then starts the network (Fig. 8-17).

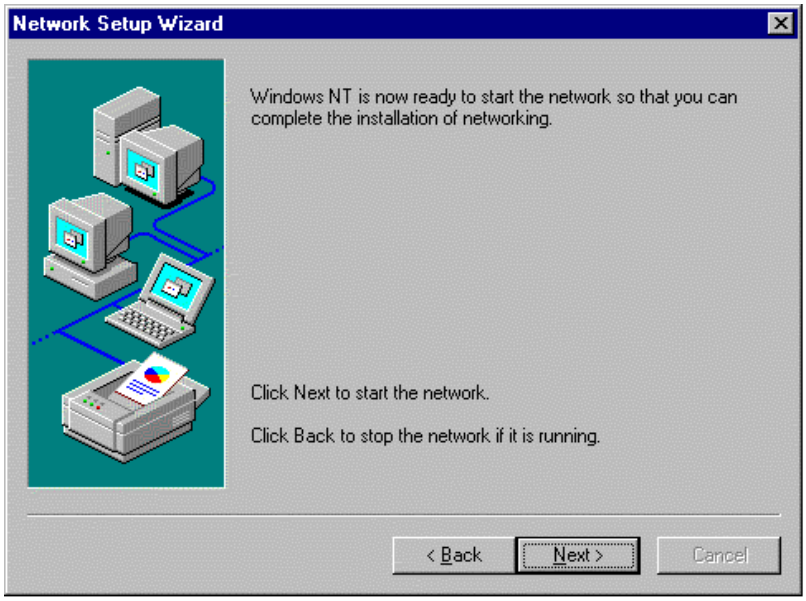

Fig. 8-17

▶ You must now specify whether your computer will be part of a workgroup or a domain.
In this example, the computer will be a member of the group "MY_PRACTICE" (Fig. 8-18).

NOTE

Contact your network administrator if you require further details!

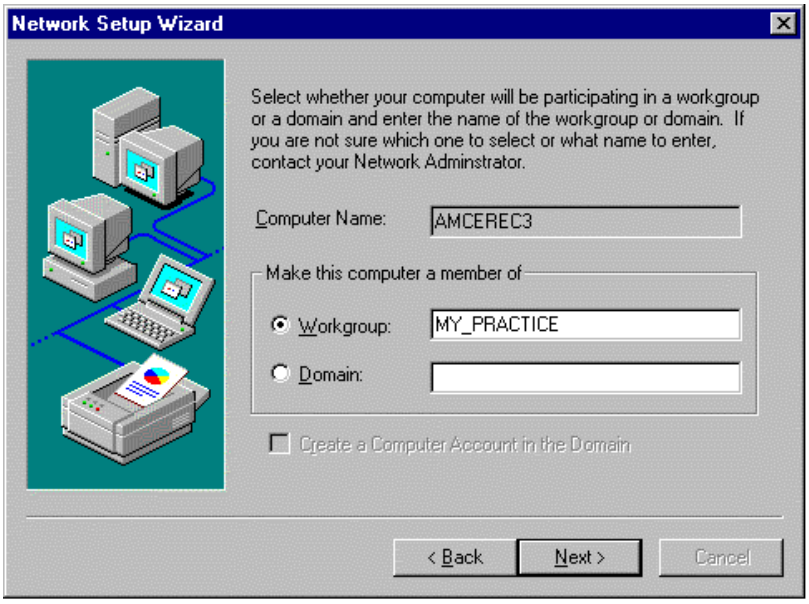

Fig. 8-18

The network is now installed.

▶ In the next dialog box (Fig. 8-19), select "Finish" to confirm.

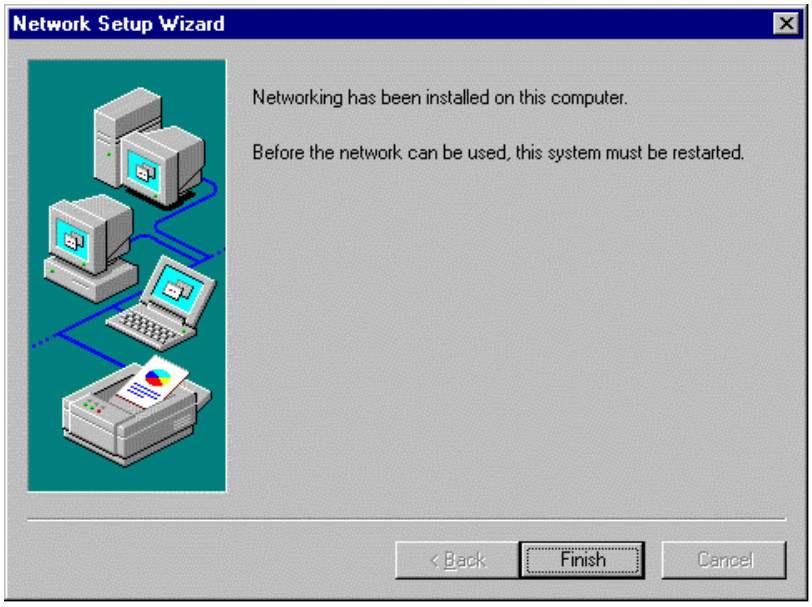

Fig. 8-19

▶ You are then prompted to restart your computer (Fig. 8-20).

Fig. 8-20

After restarting your computer, an error message is displayed. To remedy this error you must reinstall ServicePack 5 for NT.

▶ To do this, select "C:\SIRONA\NT4Sp5\SP5I386.EXE".

▶ Follow the setup instructions for the Service Pack

This error message should not be displayed after restarting.

8.1.2 Network Setup with NetBEUI Protocol

▶ In the "Network Setup Wizard" dialog box, select the "NetBEUIProtocol" and confirm with "Next" (Fig. 8-21).

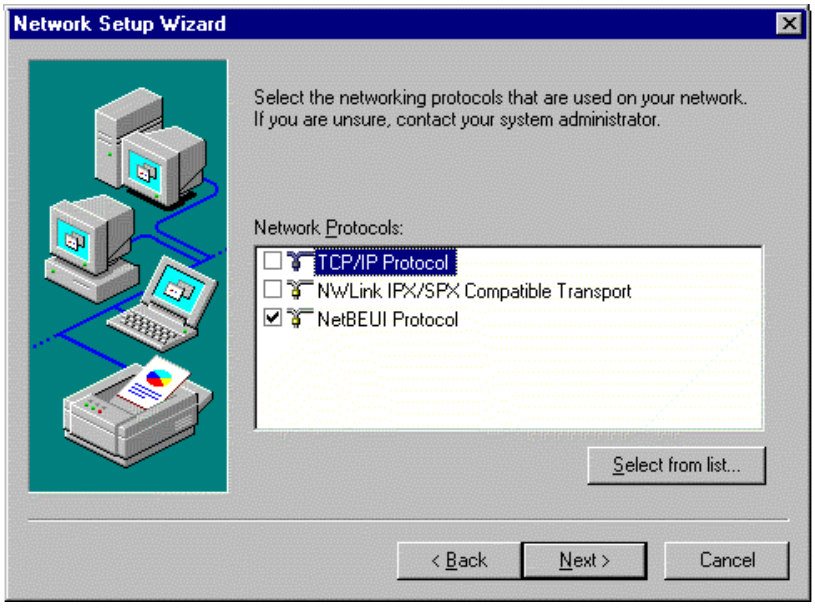

Fig. 8-21

▶ Accept the selected Network Services and confirm with "Next" (Fig. 8-22).

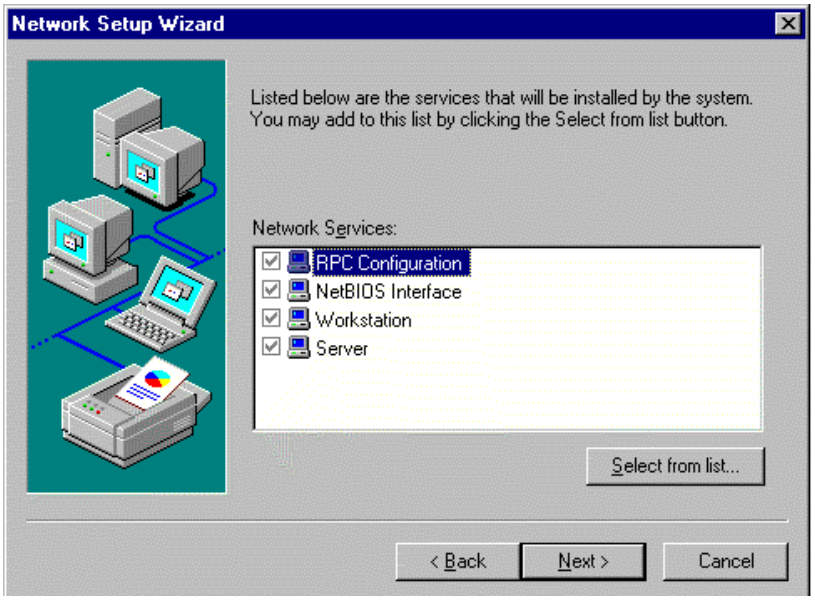

Fig. 8-22

▶ Confirm the following dialog box with "Next" (Fig. 8-23).

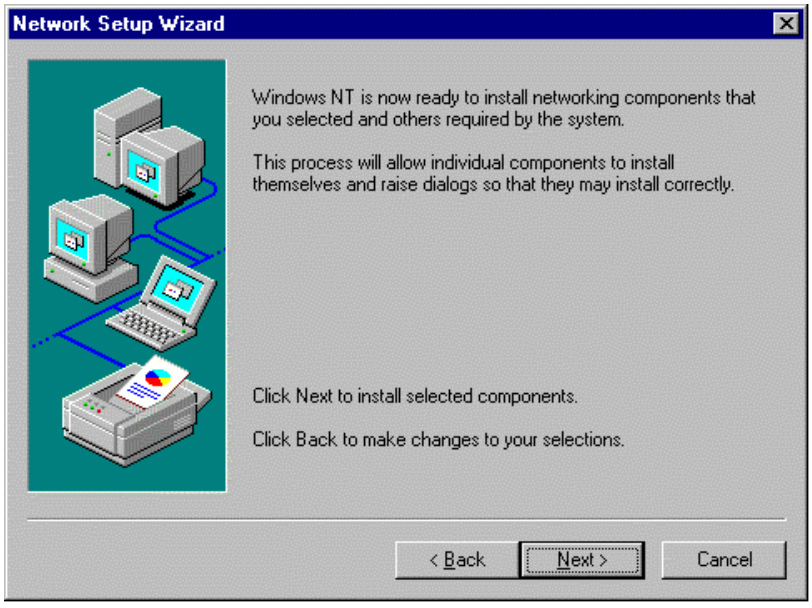

Fig. 8-23

▶ If you are prompted to enter the path in the "Windows NT Setup" dialog box, enter the path for the "i386" directory in the Windows NT 4.0 workstation CD (Fig. 8-24).

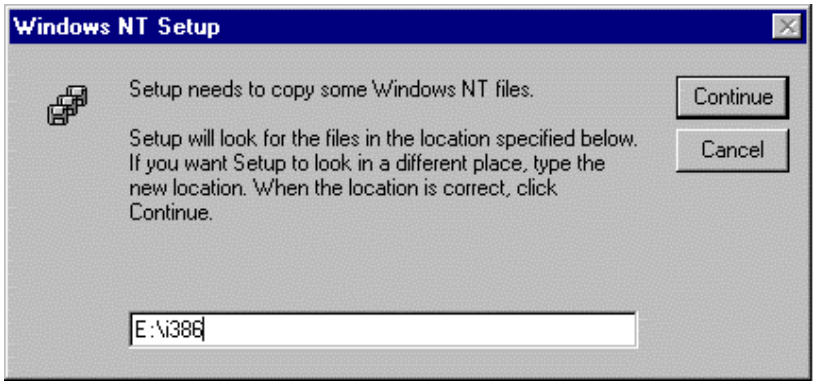

Fig. 8-24

▶ No changes are made in the Network Linkings dialog box (Fig. 8-25). Select "Next" to confirm.

NOTE

Contact your network administrator if you require further details!

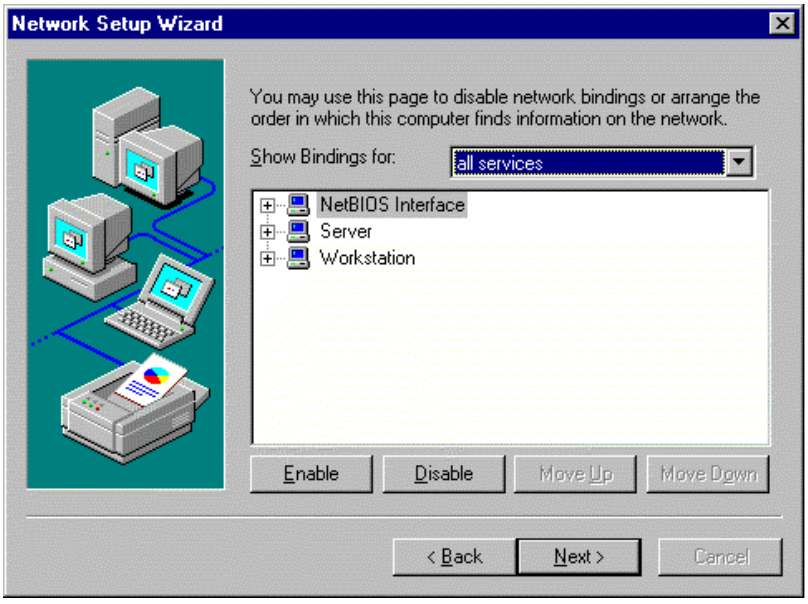

Fig. 8-25

▶ Select "Next" in the dialog box. Windows then attempts to start the network (Fig. 8-26).

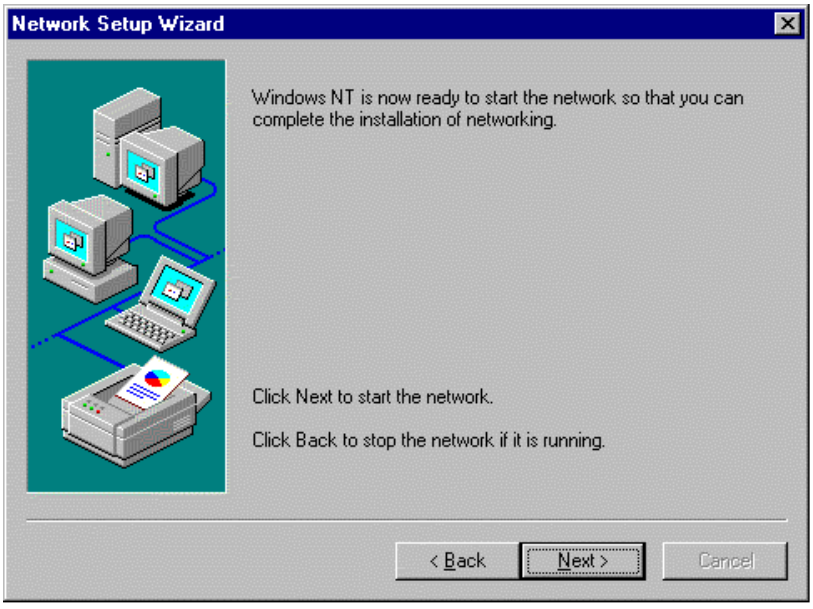

Fig. 8-26

You must now specify whether your computer will be part of a workgroup or a domain.

In this example, the computer will be a member of the group "MY_PRACTICE" (Fig. 8-27).

NOTE

Contact your network administrator if you require further details!

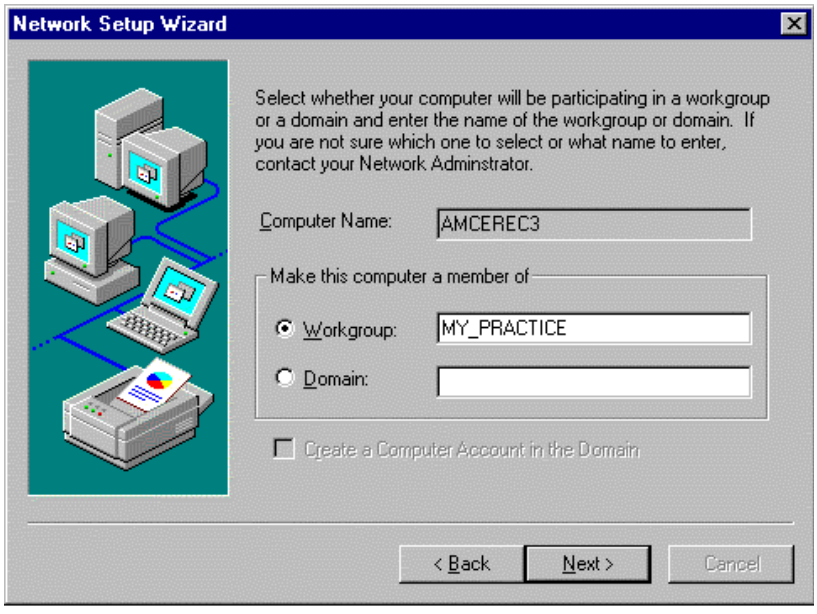

Fig. 8-27

The network is now installed.

▶ In the next dialog box (Fig. 8-28), select "Finish" to confirm.

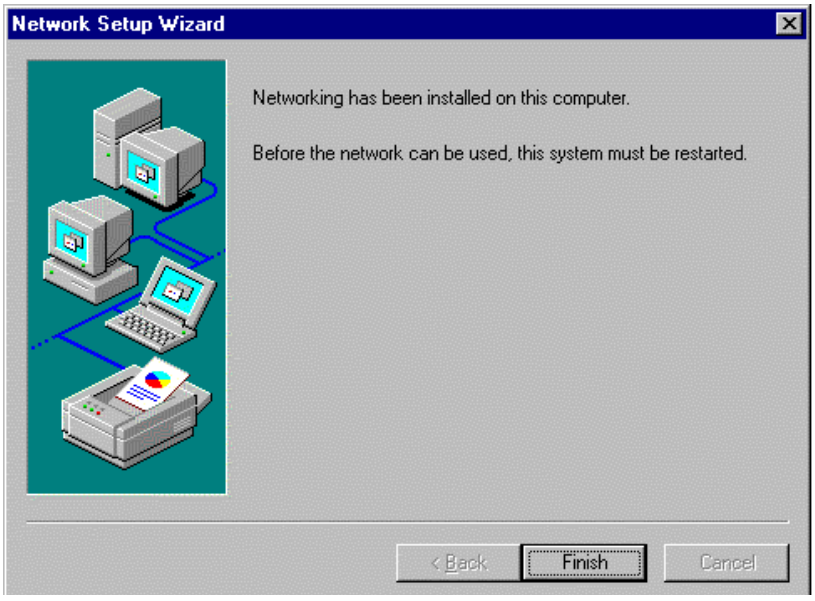

Fig. 8-28

▶ You are then prompted to restart your computer (Fig. 8-29).

Fig. 8-29

After restarting your computer, an error message is displayed. To remedy this error you must reinstall ServicePack 5 for NT.

▶ To do this, select "C:\SIRONA\NT4Sp5\SP5I386.EXE".

▶ Follow the setup instructions for the Service Pack

This error message should not be displayed after restarting.

8.1.3 Change computer name

If you wish to integrate the acquisition unit into an existing network, it may be necessary to make changes to the computer name and workgroup / domain.

NOTE

Contact your network administrator if you require further details!

- To change the computer name or workgroup / domain, click the network environment icon on your desktop with the right mouse button.
- In the dialog box displayed (Fig. 8-30), select "Properties".

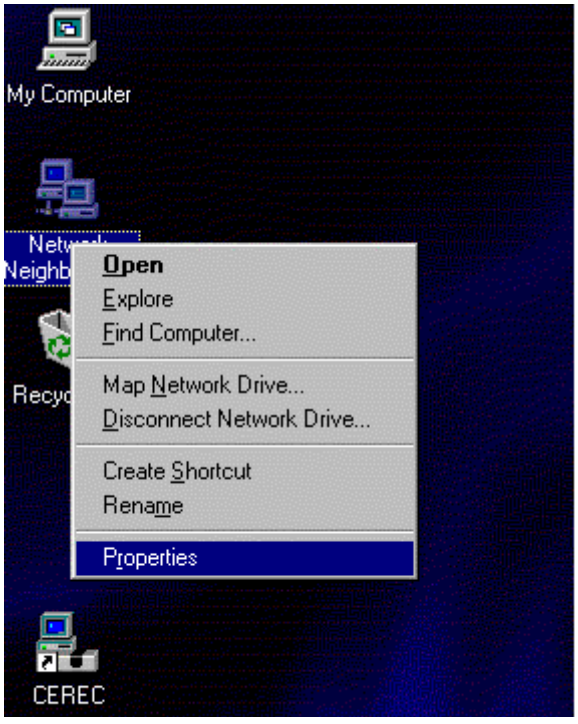

Fig. 8-30

▶ In the "Network" dialog box, click the “Identification” tab (Fig. 8-31).

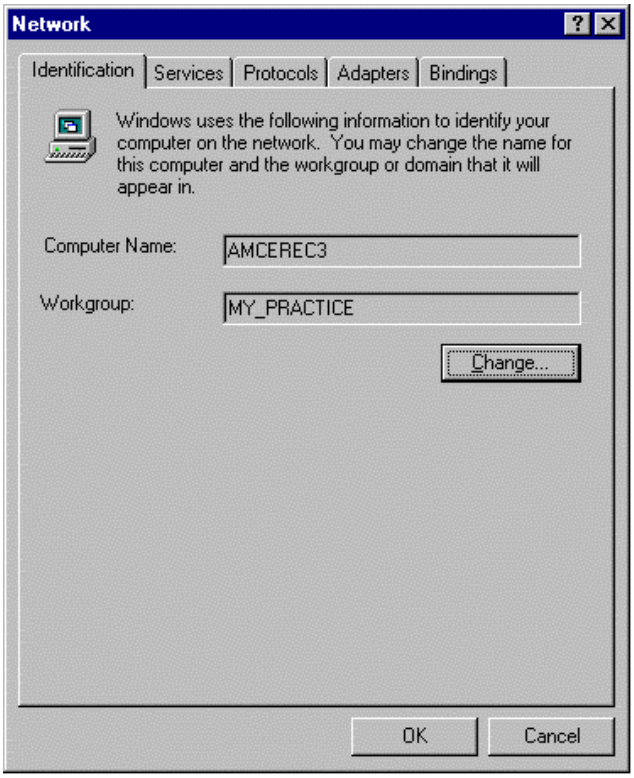

Fig. 8-31

▶ Select "Change" and make any necessary changes in the “Identification Changes” dialog box (Fig. 8-32).

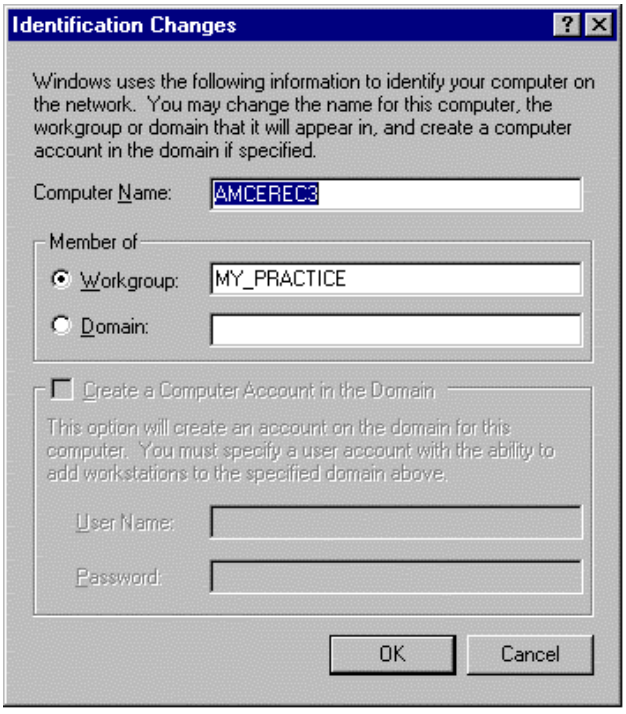

Fig. 8-32

NOTE

Contact your network administrator if you require further details!

▶ In the “Network” dialog box, click the "Protocols" tab.
Select TCP/IP Protocol and click "Properties" (Fig. 8-33).

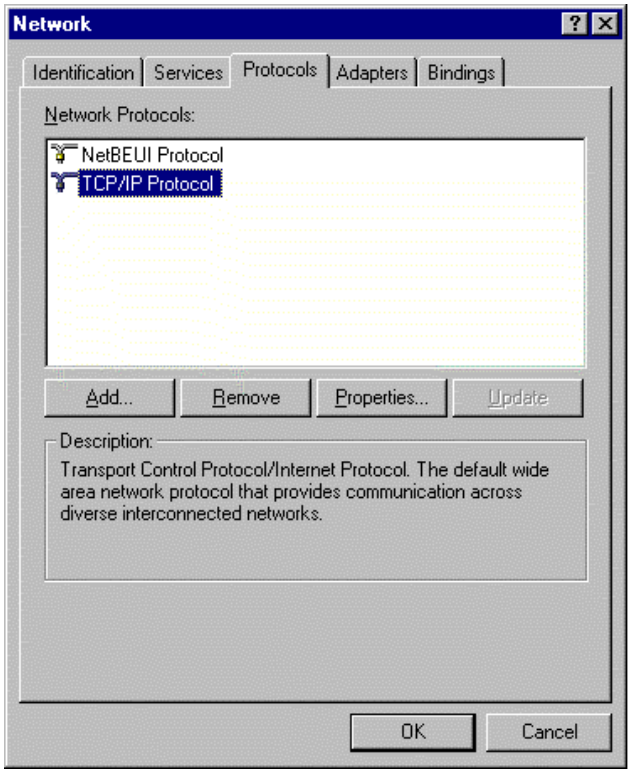

Fig. 8-33

The "Microsoft TCP/IP Properties" box (Fig. 8-34) is used to enter the host name and domain.

NOTE

These settings only apply to this example.
Request the corresponding settings for your network environment from your network administrator!

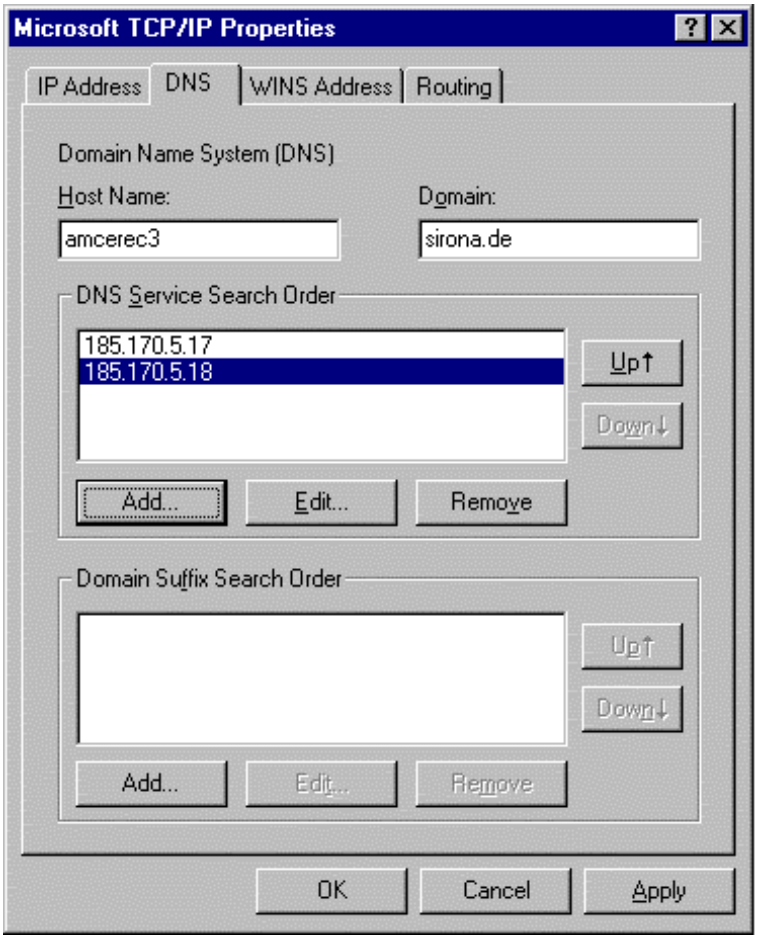

Fig. 8-34

8.1.4 User settings

The default user setting and password, "Cerec" (use correct upper/lower case), are automatically logged in when the acquisition unit is started.

This user belongs to the administrator group.

Autologin can be used by entering the necessary data in the registration database.

NOTE

Contact your network administrator for advice on changing the user settings.

8.2 How to install an MO drive

Sample installation of a magneto-optical (MO) drive on the parallel port of a CEREC 3 acquisition unit.

A Fujitsu DynaMO 640 drive with a parallel/SCSI converter is used as an **example** for the installation procedure.

You can order this MO drive from Sirona under Order No.: 41 82 981.

NOTE

The proper procedures for data relocation and running data backups are described in the SIDEXIS Operator's Manual.
*The path for the external data storage medium can be set by the service engineer in the Sidexis menu **Utilities/System Setup/Service/Relocate**.*

NOTE

The procedures and settings used in this installation guide are only intended as an example!
For other drives / converters, please observe the instructions provided by the respective manufacturer!

Connecting MO-drive

ATTENTION

Switch off the acquisition unit.

▶ Plug the smaller connector of the parallel/SCSI cable included in the scope of delivery into the upper socket **A** of the MO drive and screw down the connector.

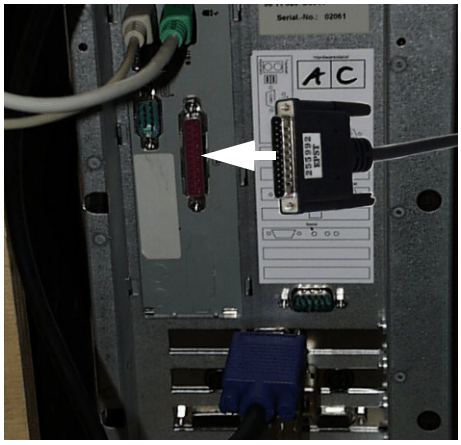

▶ Plug the other end of the cable into the parallel port of the acquisition unit or the external interface and screw down the connector.

- Connect the power supply of the MO drive.
- Switch on the MO drive first and then the acquisition unit.

8.2.1 Installing the driver software under Windows 2000

- Connect the MO drive to the USB port of the acquisition unit or the external interface.

The MO drive logs on by itself.

The drive then appears as ***"Removable Disk (F:)"*** in the Windows Explorer.

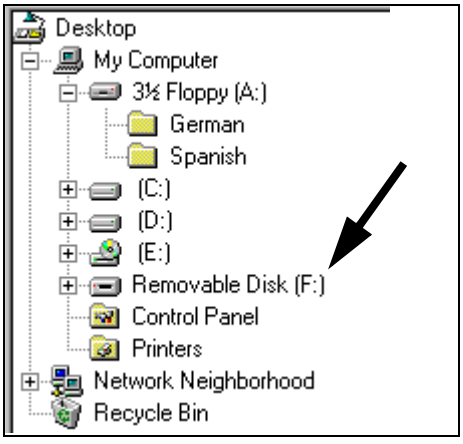

8.2.2 Installing the driver software under Windows NT

- To install the driver software, insert the first floppy disk into the floppy disk drive of the acquisition unit.
- Run the setup program ("A:\Setup.exe").

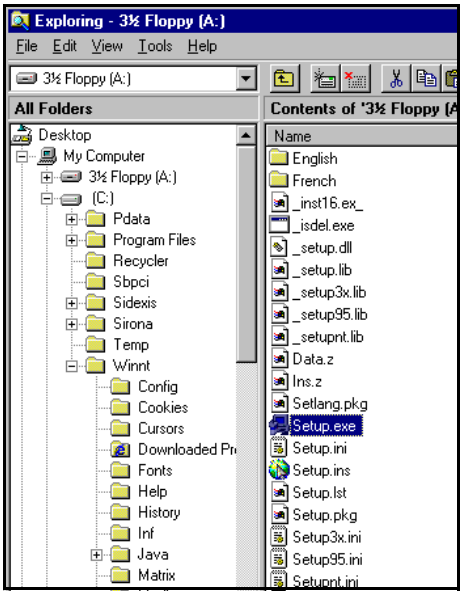

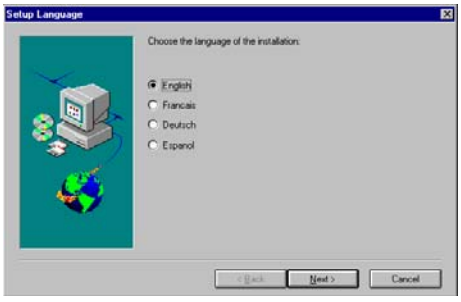

▶ Select the language you wish to use for the installation procedure and confirm with ***Next***.

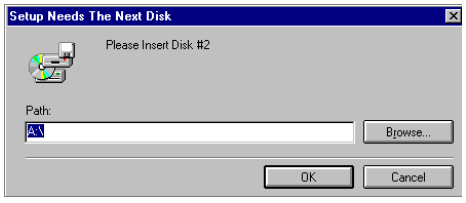

▶ Insert the second floppy disk and confirm the dialog box with ***OK***.

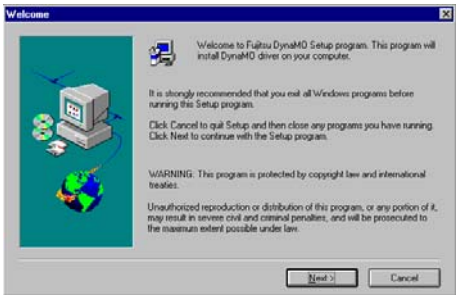

▶ Confirm the ***Welcome*** dialog box by selecting ***Next***.

In order to be able to install the driver software, you must agree to the ***"Software License Agreement"***.

▶ Select ***Yes*** to confirm.

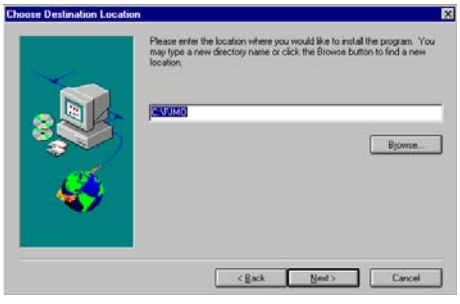

▶ Confirm the ***"Choose Destination Location"*** dialog box by selecting ***Next***.

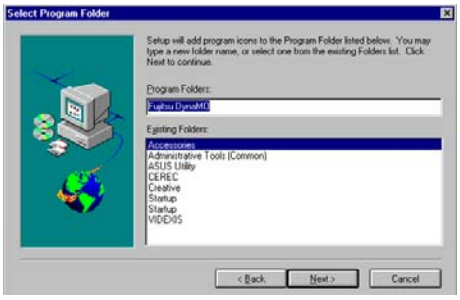

▶ Confirm the ***"Select Program Folder"*** dialog box by selecting ***Next***.

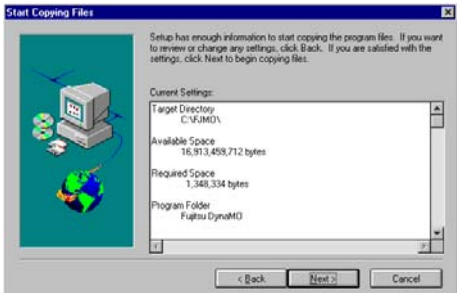

The ***"Start Copying Files"*** dialog box shows you the current settings again.

▶ Select ***Next*** to confirm.

The files will be copied.

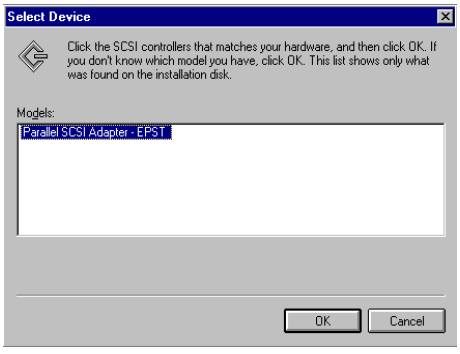

▶ In the ***"Select Device"*** dialog box, select ***"Parallel SCSI Adapter - EPST"*** and confirm with ***OK***.

▶ If you do not wish to view the "README" file, deactivate the check box in the ***"Setup Complete"*** dialog box and confirm with ***Finish***.

In order to load the driver software, the acquisition unit must be rebooted.

▶ Select ***Finish*** to confirm the ***"Setup Complete"*** dialog box.

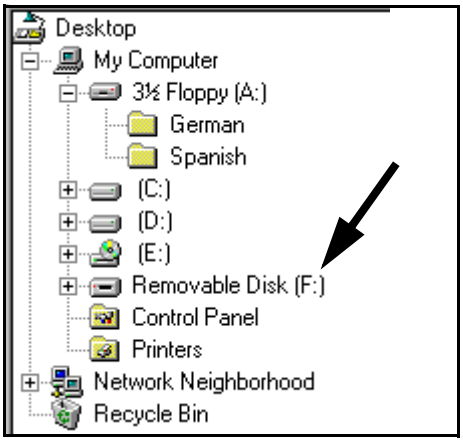

After the restart, the drive appears as ***"Removable Disk (F:)"*** in the Windows Explorer.

9 Re-test

9.1 When is the re-test carried out?

The acquisition unit CEREC 3 must be re-tested every time repair/ retrofitting work affecting one of the following components is completed:

- PC
- PC power supply
- Isolating transformer
- Camera
- Camera cable

A re-test must always be carried out at least every 36 months.

9.2 Description of device type

The acquisition unit CEREC 3 is a class I device with a detachable power supply cord. The camera is a type BF applied part.

9.3 To be carried out on completion of the test

1. Visual inspection
2. Protective ground wire resistance
3. Device leakage current
4. Insulation resistance
5. Functional test

9.4 What the test steps involve

9.4.1 Visual inspection

- Check that the device labels are present and legible
- Do the fuses inserted comply with the prescribed rated fuse current and fuse type?
- Are all covers intact? There must be no visible gaps between the covers that could result in injuries or via which contact could be made with electrical components located inside the device.
- There must be no visible damage to any of the cables.
- There must be no scratches penetrating the surface of the display screen.
- There must be no cracks or chips on the prism.

9.4.2 Protective ground wire resistance

The protective ground wire resistance of the power cable (measured from plug to socket) must be ≤ 100 mΩ.

The protective ground wire resistance from the power input of the acquisition unit CEREC 3 to the PC rear panel must be ≤ 200 mΩ.

The protective ground wire resistance from the power cable plug to the PC rear panel must be ≤ 300 mΩ.

9.4.3 Device leakage current

The device leakage current must be measured in relation to the PC rear panel. In the case of direct measurement under normal conditions it must be ≤ 0.1 mA. In the case of a first fault (protective ground wire disconnected), it must be ≤ 0.5 mA.

9.4.4 Insulation resistance

Since the camera is an applied part and does not have a patient connection, when re-testing is carried out, the insulation resistance is measured instead of the patient leakage current. An instrument able to provide a test voltage of 500 VDC must be used to take the measurement.

The insulation resistance is measured between:

- Protective ground and PC power supply unit housing
- Protective ground and metal part at the front of the camera lens

In both cases, the insulation resistance must be ≥ 0.1 MΩ.

9.4.5 Functional test

1. Once the above test steps have been completed, restore the acquisition unit CEREC 3 to normal operating conditions.
2. Switch the acquisition unit CEREC 3 on for the functional test.
3. Once booting is complete, start the CEREC application.
4. Take a camera shot of the calibration piece suspended from the camera.
   ↳ The resulting image must not exhibit any surface defects.

The re-test is now complete.

If any of the test criteria have not been met, the acquisition unit CEREC 3 must be repaired accordingly.

➢ Record the completion of the test steps in the test report. The test reports are recorded in a separate document in the relevant national language and can be accessed via the partner portal by quoting the material numbers listed below.

Language	Material number
German	6392364
English	6392372
French	6392380
Spanish	6392398
Italian	6392406
Swedish	6392505
Russian	6392414
Danish	6392422
Norwegian	6392430
Dutch	6392448
Finnish	6392455
Japanese	6392463
Portuguese	6392471
Korean	6392489
Chinese	6392497

We reserve the right to make any alterations which may be due to technical improvements.

© Sirona Dental Systems GmbH 2000
D 3344.076.01.05.02 04.2012

Sprache: englisch
Ä.-Nr.: 115 590

Printed in Germany
Imprimé en Allemagne

Sirona Dental Systems GmbH

Fabrikstraße 31
64625 Bensheim
Germany
www.sirona.com

in the USA:

Sirona Dental Systems LLC
4835 Sirona Drive, Suite 100
Charlotte, NC 28273
USA

Order No **58 35 694 D 3344**